The promise of precision, every time.

MANIFOLDS

MACWELD
machining

At Mac-Weld we promise precision, every time. We're proud of our work, and we work closely with our customers. We design and develop products that perform best under the most challenging conditions. We don't crack under pressure. We don't melt under heat. We measure the flow, and we're measured in our response. We stand by our quality, our time, and our price. We're Mac-Weld, and our promise is, to be the best.

The promise of precision, every time.

Table of Contents

Instrument Manifolds 4
Part Number Reference Chart 6
2-Valve Manifold 8
GV 2-Valve Block & Bleed 10
3-Valve In-Line Block & Bleed Manifold 12
3-Valve Manifold 14
3-Valve "T" Type Manifold 16
Flange x Flange H-Style Manifold 18
Low Profile Instrument Manifold 20
5-Valve Bar Type Manifold Single Equalizer 22
5-Valve "T" Type Manifold 24
5-Valve Bar / Wafer Type Manifold 26
5-Valve Manifold 28
Double Block and Bleed 30
Components of a Valve 33
Options & Accessories 33
Materials & Testing 34

Mac-Weld reserves the right to update and/or change our product line at anytime without written notice. Drawings may differ slightly from final product. For the most up to date and accurate drawing, please contact your Mac-Weld Sales representative today at 1-877-622-9353. Revised January 2024.

2-Valve Manifold
Remote Mount with Drain

GV 2-Valve Manifold Direct Mount
with Drain (Block n Bleed Valve)

3-Valve In-Line Block & Bleed Manifold
Remote Mount with Vent

3-Valve Manifold
Remote Mount with Drain

3-Valve 'T' Type Manifold
Direct Mount with Drain

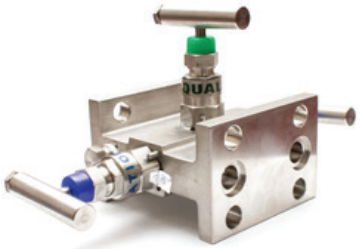

Flange x Flange
H-Style Manifold

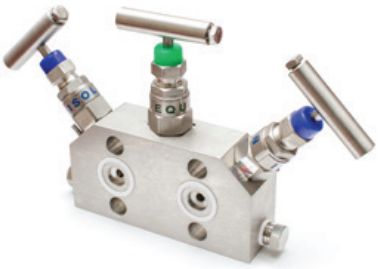

Low Profile Instrument Manifold

5-Valve Bar Type Manifold
Direct Mount with Drain

5-Valve 'T' Type Manifold
Direct Mount with Drain

5-Valve Bar/ Wafer Type Manifold
Remote Mount with Drain

5-Valve Manifold
Remote Mount with Drain

Double Block and Bleed

Instrument Manifolds

Mac-Weld manifold valves are designed and tested to industry quality standards.

2 Valve Manifolds

Mac-Weld 2 valve manifolds provide economical and convenient mounting of pressure gauge, pressure transmitters and pressure switches. Mac-Weld 2 valve manifolds are offered in direct mount and remote mount configurations.

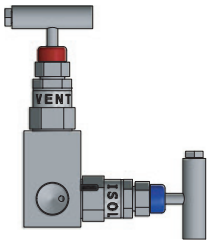

3 and 5 Valve Manifolds

Mac-Weld 3 and 5 valve manifolds are economical and convenient for mounting differential pressure transmitters and differential pressure switches. Mac-Weld 3 and 5 valve manifolds are available in direct mount and remote mount configurations.

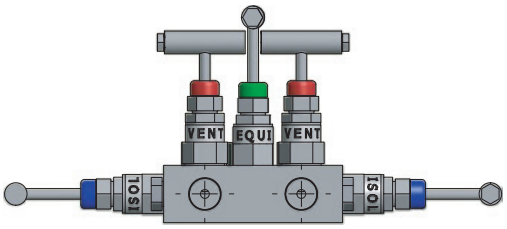

Specifications and Features

Mac-Weld 2, 3, and 5 valve manifolds incorporate high quality needle valves designed to operate at pressures up to 6000 psig with standard PTFE gland packing. The packing is positioned below the stem threads to ensure no contact between system process and the stem threads. The upper gland body is tightened and secured into position by a lock nut. The lower gland body is directly screwed into the component body and secured into place to prevent accidental loosening of the gland body during operation.

Additionally features include:

- Standard seat diameter – 5mm CV: 0.4
- Maximum standard pressure up to 6000 psig @ 100˚F (414 bar @ 38˚C)
- Stainless steel pin prevents loosening of the gland body during operation
- Gland is externally adjustable
- Backseat stop spindle prevents blowout
- The non-rotating stem tip design in the needle valves prevent over-tightening and possible damage to both the valve stem and seat.
- Dust cap prevents ingress of contaminants

CRN Registered Valves

A majority of our manifold valves have a CRN number, see page 32 for the complete list.

Please refer to the following pages to reference instrument manifold configuration and sizes.

Part Number Reference Chart

Part Number Reference Chart is provided for informational purposes only.

PART NUMBER	Example Part Number: M-5T-L-DM-08F-FLG-P	
Component	M	Manifold Valve
No. Valves	2	2 Valve Manifold
	3	3 Valve Manifold
	4	5 Valve Manifold
Model	GV	Gauge Valve
	BB	Block & Bleed
	2, 3, 5	Number of valves in the manifold body
	C	Horizontal
	T	T Type (Flange X NPT)
	H	H Type (Flange X Flange)
Body Material	L	316/316L Stainless Steel
Mounting	DM	Direct Mount
	RM	Remote Mount
Process Connection	08F	1/2" Female NPT (Threads to ASME B 1.20.10)
	08M	1/2" Male NPT (Threads to ASME B 1.20.10)
	FLG	Flange
Instrument Connection	08F	1/2" Female NPT (Threads to ASME B 1.20.10)
	08M	1/2" Male NPT (Threads to ASME B 1.20.10)
	FLG	Flange
Drain c/w Plug	P	1/4" Female NPT
	PB	1/4" Female NPT Bottom
Vent	V08F	1/2" Female NPT
	V04F	1/4" Female NPT

Please Note The Following:

Part Number Reference Chart is provided for informational purposes only. Mac-Weld provides standard stock items with predetermined part numbers for your convenience.

A Note on Safe Product Selection:

Customer to select suitable product type and size based on the application considering the overall system design. For safe, easy and trouble-free operation the customer must consider material compatibility, temperature and pressure ratings when selecting a product.

Manifold Flange Groove O-Rings

Replacement O-rings Sold Separately

Our manifolds are available with two different O-rings, standard PTFE (Teflon) and graphoil O-rings. PTFE O-rings have a good chemical resistance and can withstand acids and aggressive chemicals. Graphoil O-rings are recommended for high temperature applications like steam.

IEC
Graphoil O-Ring

RT (Rosemount)
Graphoil O-Ring

IEC
PTFE O-Ring

RT (Rosemount)
PTFE O-Ring

Dimensions: IEC – 25.5 mm X 19.9 mm X 2.0 mm deep. C-C is 54 mm on IEC
RT (Rosemount) – 20.3 mm OD X 5 mm deep. C-C is 33 mm on RT

2-VALVE MANIFOLD

CRN Registered

Mac-Weld Part Number(s)						
PART NUMBER	DESCRIPTION	MATERIAL	END CONNECTION (NPT or FLANGE)		Unit Weight (Kg)	DRAIN /VENT c/w PLUG
			INLET	OUTLET		
M-2C-L-RM-08F-08F-P ●	2 Valve; Block & Bleed; Horizontal; Remote Mount	316/316L	1/2" F	1/2" F	1.10	1 Plug(s)

(●=CRN product, M=Male, F=Female, FLG=Flange, G=Graphoil, SEQ=Single Equalizer)

2-Valve Manifold

Remote Mount with Drain

Mac-Weld 2-Valve remote mount manifold provides block and bleed with drain/vent for pressure gauge, switch or transmitter applications.

- 316/316L Stainless Steel Body, stem and trim
- 6000 psig @ 100°F (414 bar @ 38°C)
- PTFE Packing, with optional graphoil packing available
- NACE certified
- Non-rotating trim provides bubble tight shut-off

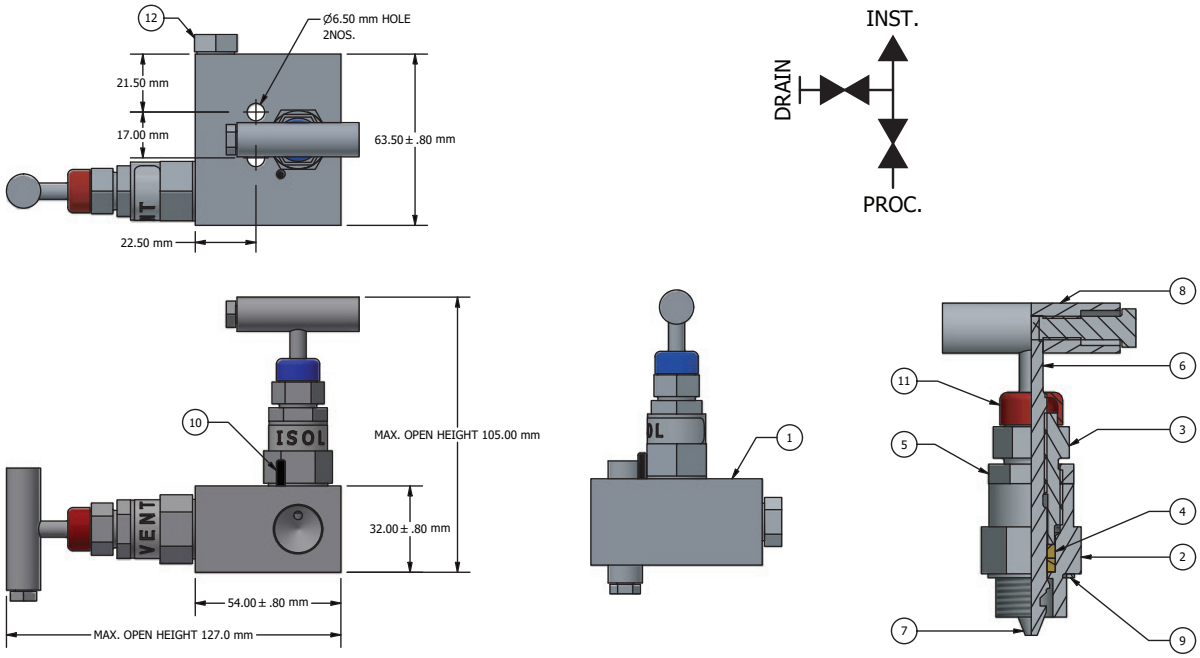

M-2C-L-RM-08F-08F-P shown, for a complete list of valves see page 32.

PART NO.	PART DESCRIPTION	MATERIAL	QTY.
1	BODY	316/316L SS NACE	1
2	GLAND BODY	316/316L SS NACE	2
3	GLAND RETAINER	304/304L SS	2
4	GLAND SEAL	P.T.F.E.	4
5	CHECK NUT	304/304L SS	2
6	SPINDLE	316/316L SS NACE	2
7	TRIM	316/316L SS NACE	2
8	HANDLE	304/304L SS	2
9	WASHER	316/316L SS NACE	2
10	LOCK PIN	316/316L SS	2
11	DUST CAP	PVC	2
12	DRAIN PLUG 1/4" NPT (M)	316/316L SS NACE	1

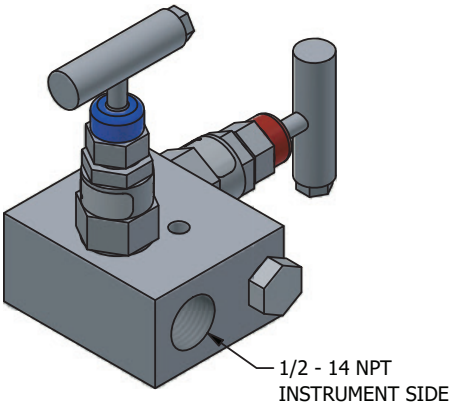

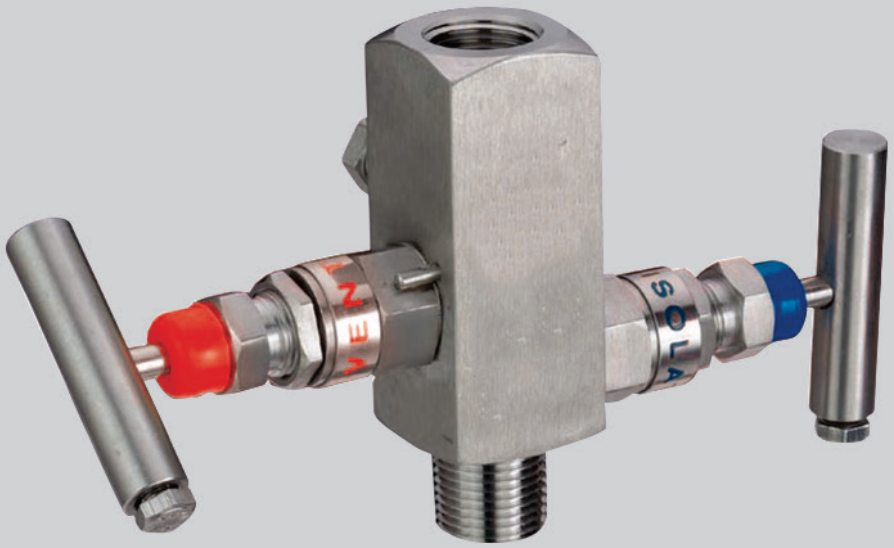

GV 2-VALVE BLOCK & BLEED

CRN Registered*

**Please note: the M-2GV-L-DM-12M-08M-P is not registered with a CRN*

Mac-Weld Part Number(s)

PART NUMBER	DESCRIPTION	MATERIAL	END CONNECTION (NPT or FLANGE)		Unit Weight (Kg)	DRAIN /VENT c/w PLUG
			INLET	OUTLET		
M-2GV-L-DM-08M-08F-P ●	2 Valve; Block & Bleed; In-Line; Direct Mount	316/316L	1/2" M	1/2" F	1.00	1 Plug(s)
M-2GV-L-DM-08M-08F-P-G ●	2 Valve; Block & Bleed; In-Line; Direct Mount, Graphoil	316/316L	1/2" M	1/2" F	1.00	1 Plug(s)
M-2GV-L-DM-08F-08F-P ●	2 Valve; Block & Bleed; In-Line; Direct Mount	316/316L	1/2" F	1/2" F	1.00	1 Plug(s)
M-2GV-L-DM-08F-08M-P ●	2 Valve; Block & Bleed; In-Line; Direct Mount	316/316L	1/2" F	1/2" M	1.00	1 Plug(s)
M-2GV-L-DM-08M-08M-P ●	2 Valve; Block & Bleed; In-Line; Direct Mount	316/316L	1/2" M	1/2" M	1.00	1 Plug(s)
M-2GV-L-DM-12M-08M-P	2 Valve; Block & Bleed; In-Line; Direct Mount	316/316L	3/4" M	1/2" M	1.00	1 Plug(s)
M-2GV-L-DM-12M-08F-P ●	2 Valve; Block & Bleed; In-Line; Direct Mount	316/316L	3/4" M	1/2" F	1.00	1 Plug(s)

(●=CRN product, M=Male, F=Female, FLG=Flange, G=Graphoil, SEQ=Single Equalizer)

GV 2-Valve Manifold

Direct Mount with Drain (Block and Bleed)

Mac-Weld's GV 2-Valve Manifold, also known as a Block and Bleed Valve. Mounts directly to in-line gauge or static instruments to provide single block and bleed for isolation and drain/vent capability.

- 316/316L Stainless Steel Body, stem and trim
- 6000 psig @ 100˚F (414 bar @ 38˚C)
- PTFE Packing, with optional graphoil packing available
- NACE certified
- Non-rotating trim provides bubble tight shut-off

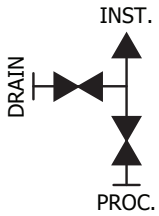

** 10,000 psig also available in CRN. Ask sales for more details.

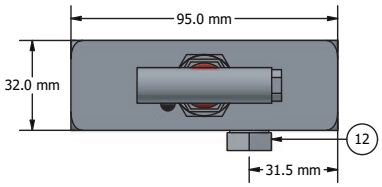

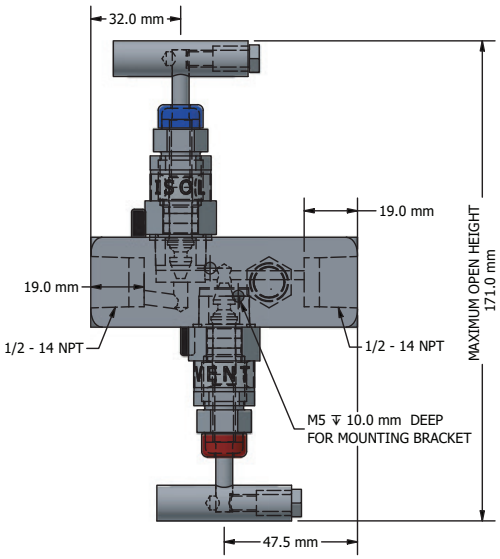

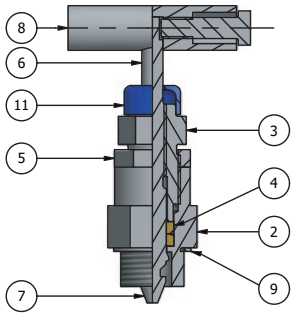

M-2GV-L-DM-08F-08F-P shown, for a complete list of valves see page 32.

PART NO.	PART DESCRIPTION	MATERIAL	QTY.
1	BODY	316/316L SS NACE	1
2	GLAND BODY	316/316L SS NACE	2
3	GLAND RETAINER	304/304L SS	2
4	GLAND SEAL	P.T.F.E.	4
5	CHECK NUT	304/304L SS	2
6	SPINDLE	316/316L SS NACE	2
7	TRIM	316/316L SS NACE	2
8	HANDLE	304/304L SS	2
9	WASHER	316/316L SS NACE	2
10	LOCK PIN	316/316L SS	2
11	DUST CAP	PVC	2
12	DRAIN PLUG 1/4" NPT (M)	316/316L SS NACE	1

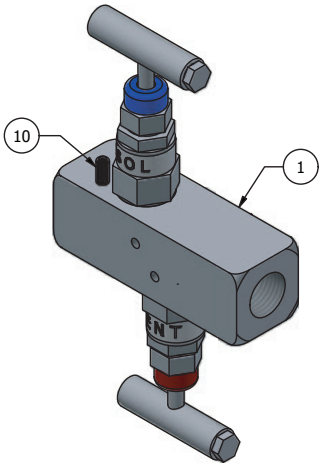

3-VALVE IN-LINE BLOCK & BLEED MANIFOLD

CRN Registered

Mac-Weld Part Number(s)						
PART NUMBER	DESCRIPTION	MATERIAL	END CONNECTION (NPT or FLANGE)		Unit Weight (Kg)	DRAIN /VENT c/w PLUG
			INLET	OUTLET		
M-3BB-L-RM-08F-08F-V08F ●	3 Valve; Block & Bleed; In-Line; Remote Mount	316/316L	1/2" F	1/2" F	2.90	1 Plug(s)

(●=CRN product, M=Male, F=Female, FLG=Flange, G=Graphoil, SEQ=Single Equalizer)

3-Valve In-Line Block & Bleed Manifold

Remote Mount with Vent

Mac-Weld's 3-Valve In-Line Block and Bleed manifold is a variation of a typical 2 valve block and bleed manifold for gauge and static instrument applications.

An additional block valve is provided as well as a single 1/2" vent/ drain port located on the underside of the manifold.

- 316/316L Stainless Steel Body, stem and trim
- 6000 psig @ 100°F (414 bar @ 38°C)
- PTFE Packing, with optional graphoil packing available
- NACE certified
- Non-rotating trim provides bubble tight shut-off

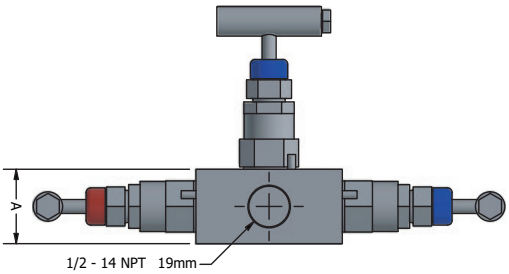

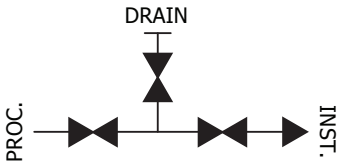

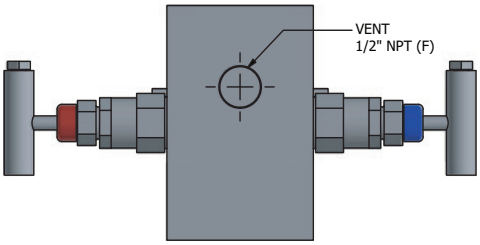

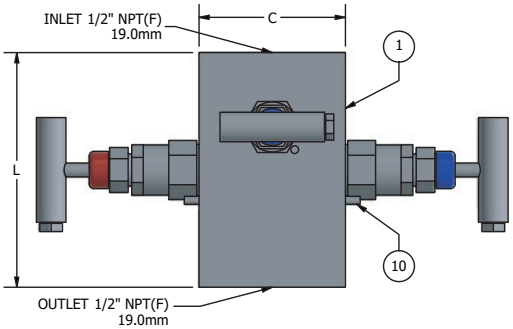

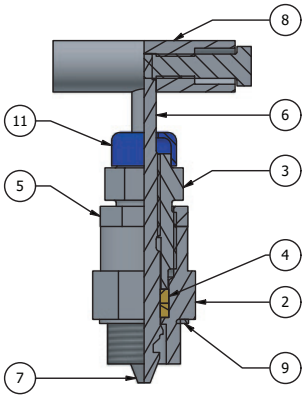

M-3BB-L-RM-08F-08F-V08F shown, for a complete list of valves see page 32.

PART NO.	PART DESCRIPTION	MATERIAL	QTY.
1	BODY	316/316L SS NACE	1
2	GLAND BODY	316/316L SS NACE	3
3	GLAND RETAINER	304/304L SS	3
4	GLAND SEAL	P.T.F.E.	6
5	CHECK NUT	304/304L SS	3
6	SPINDLE	316/316L SS NACE	3
7	TRIM	316/316L SS NACE	3
8	HANDLE	304/304L SS	3
9	WASHER	316/316L SS NACE	3
10	LOCK PIN	304/304L SS	3
11	DUST CAP	P.V.C.	3

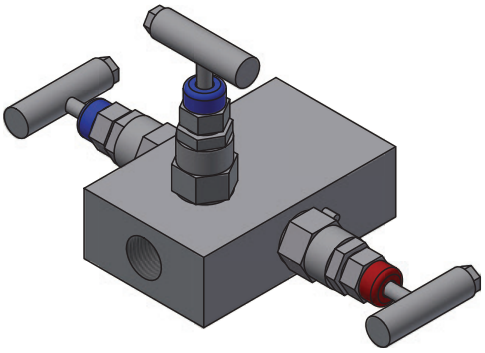

3-VALVE MANIFOLD

CRN Registered

Mac-Weld Part Number(s)						
PART NUMBER	DESCRIPTION	MATERIAL	END CONNECTION (NPT or FLANGE)		Unit Weight (Kg)	DRAIN /VENT c/w PLUG
			INLET	OUTLET		
M-3C-L-RM-08F-08F-P ●	3 Valve; Horizontal; Remote Mount	316/316L	1/2" F	1/2" F	1.80	2 Plug(s)

(●=CRN product, M=Male, F=Female, FLG=Flange, G=Graphoil, SEQ=Single Equalizer)

3-Valve Manifold

Remote Mount with Drain

Mac-Weld's 3-Valve Remote Mount Manifold with drain/vent for differential pressure instrumentation. The manifold has one equalizer valve, two isolation valves and two drain/vent ports.

- 316/316L Stainless Steel Body, stem and trim
- 6000 psig @ 100°F (414 bar @ 38°C)
- PTFE Packing, with optional graphoil packing available
- NACE certified
- Non-rotating trim provides bubble tight shut-off

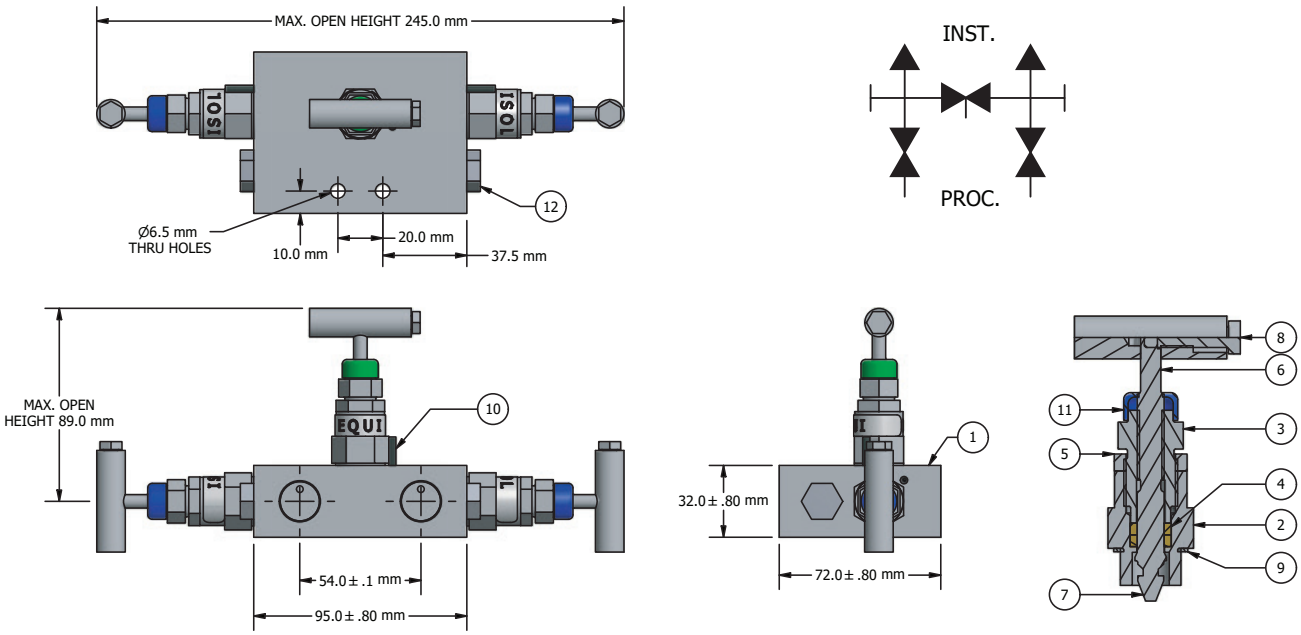

M-3C-L-RM-08F-08F-P shown, for a complete list of valves see page 32.

PART NO.	PART DESCRIPTION	MATERIAL	QTY.
1	BODY	316/316L SS NACE	1
2	GLAND BODY	316/316L SS NACE	3
3	GLAND RETAINER	304/304L SS	3
4	GLAND SEAL	P.T.F.E.	6
5	CHECK NUT	304/304L SS	3
6	SPINDLE	316/316L SS NACE	3
7	TRIM	316/316L SS NACE	3
8	HANDLE	304/304L SS	3
9	WASHER	316/316L SS NACE	3
10	LOCK PIN	316/316L SS	3
11	DUST CAP	PVC	3
12	DRAIN PLUG 1/4" NPT (M)	316/316L SS NACE	2

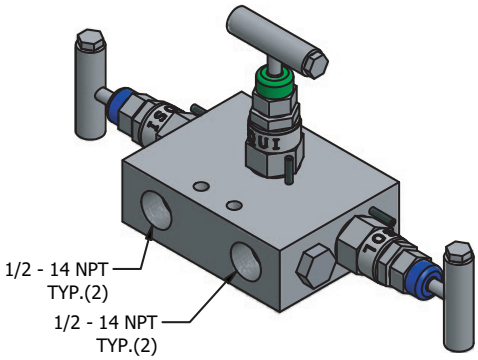

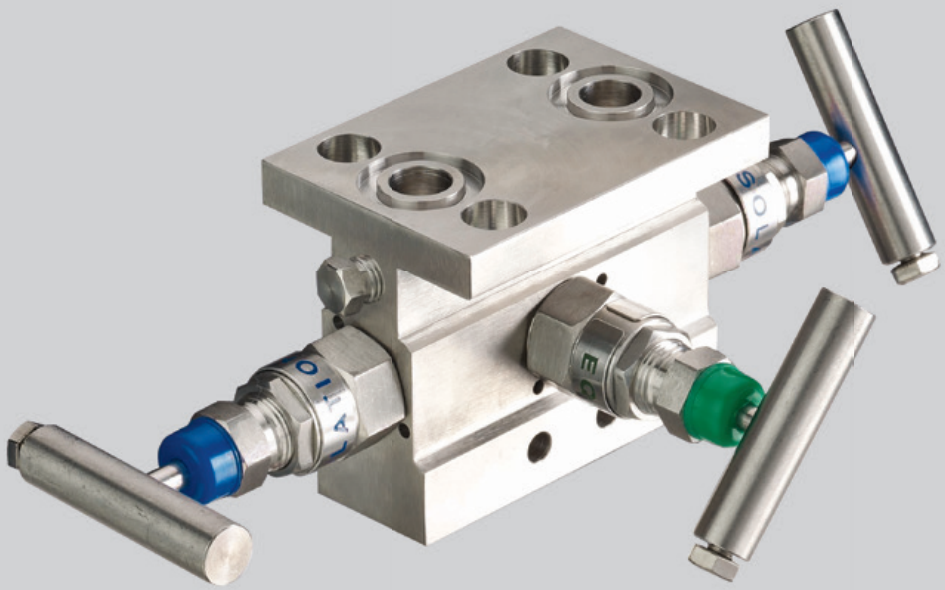

3-VALVE "T" TYPE MANIFOLD

CRN Registered

Mac-Weld Part Number(s)						
PART NUMBER	DESCRIPTION	MATERIAL	END CONNECTION (NPT or FLANGE)		Unit Weight (Kg)	DRAIN /VENT c/w PLUG
			INLET	OUTLET		
M-2T-L-DM-08F-FLG-P-IEC ●	2 Valve; 'T' Style; Direct Mount, IEC Connections	316/316L	1/2" F	FLG	1.40	1 Plug(s)
M-3T-L-DM-08F-FLG-P-IEC ●	3 Valve; 'T' Style; Direct Mount, IEC Connections	316/316L	1/2" F	FLG	2.00	2 Plug(s)

(●=CRN product, M=Male, F=Female, FLG=Flange, G=Graphoil, SEQ=Single Equalizer)

3-Valve "T" Type Manifold

Direct Mount with Drain

Mac-Weld's 3-Valve Direct Mount 'T' Type Manifold with drain/vent for differential pressure instrumentation. The manifold has one equalizer valve, two isolation valves and two drain/vent ports.

- 316/316L Stainless Steel Body, stem and trim
- 6000 psig @ 100°F (414 bar @ 38°C)
- PTFE Packing, with optional graphoil packing available
- NACE certified
- Non-rotating trim provides bubble tight shut-off
- Flange 0-rings and mounting bolts included with manifold

Available with 2 & 3 valves

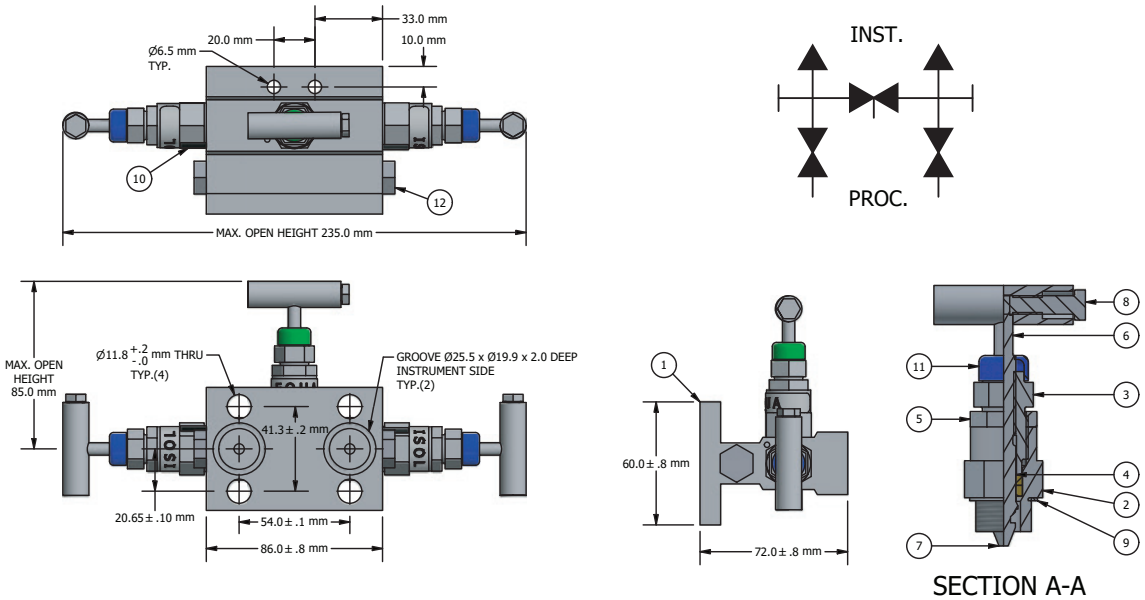

M-3T-L-DM-08F-FLG-P-IEC shown, for a complete list of valves see page 32.

PART NO.	PART DESCRIPTION	MATERIAL	QTY.
1	BODY	316/316L SS NACE	1
2	GLAND BODY	316/316L SS NACE	3
3	GLAND RETAINER	304/304L SS	3
4	GLAND SEAL	P.T.F.E.	6
5	CHECK NUT	304/304L SS	3
6	SPINDLE	316/316L SS NACE	3
7	TRIM	316/316L SS NACE	3
8	HANDLE	304/304L SS	3
9	WASHER	316/316L SS NACE	3
10	LOCK PIN	316/316L SS	3
11	DUST CAP	PVC	3
12	DRAIN PLUG 1/4" NPT (F)	316/316L SS NACE	2

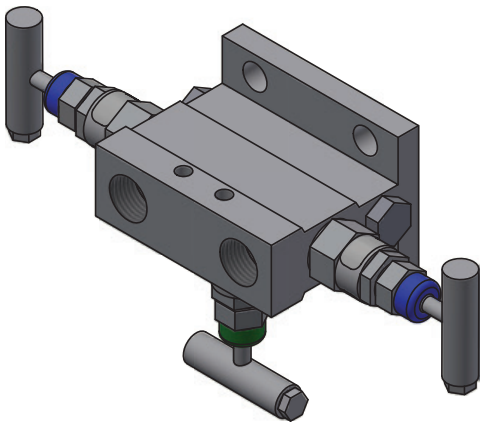

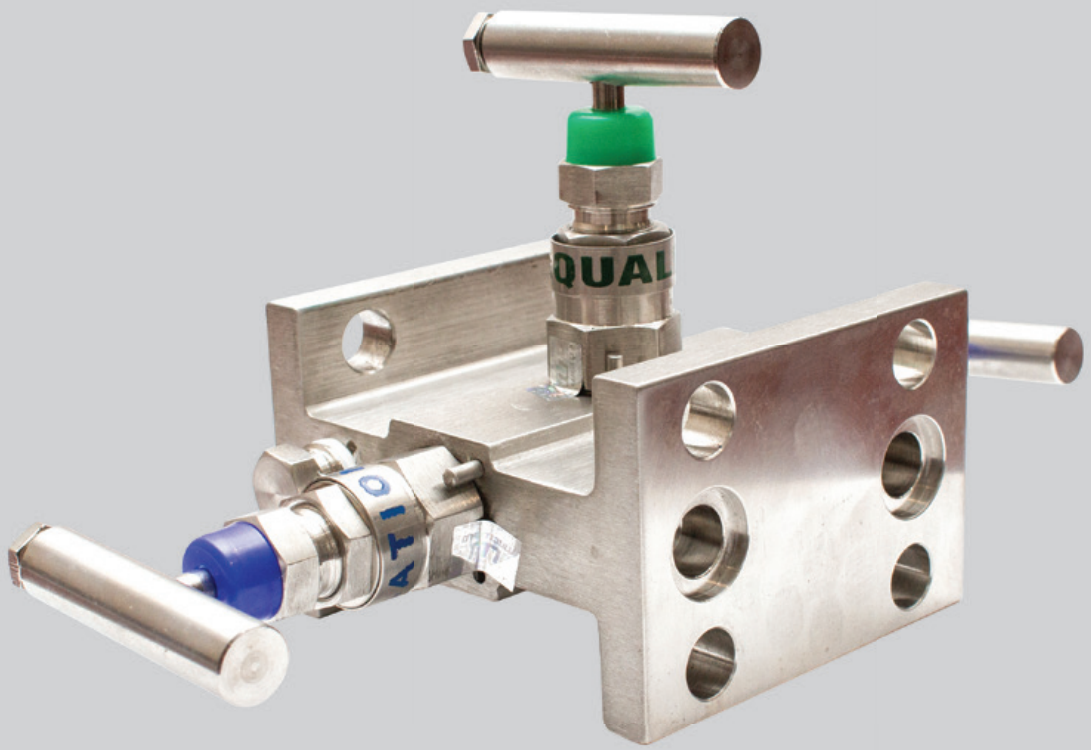

FLANGE X FLANGE H-STYLE MANIFOLD

CRN Registered*

**Please note: the M-5H-L-DM-FLG-FLG-P-IEC is not registered with a CRN*

Mac-Weld Part Number(s)

PART NUMBER	DESCRIPTION	MATERIAL	END CONNECTION (NPT or FLANGE)		Unit Weight (Kg)	DRAIN /VENT c/w PLUG
			INLET	OUTLET		
M-3H-L-DM-FLG-FLG-P-IEC ●	3 Valve; "H" Style; Direct Mount; C/W Mounting Holes	316/316L	FLG	FLG	2.00	2 Plug(s)
M-5H-L-DM-FLG-FLG-P-IEC	5 Valve; "H" Style; Direct Mount; C/W Mounting Holes	316/316L	FLG	FLG	2.30	2 Plug(s)

(●=CRN product, M=Male, F=Female, FLG=Flange, G=Graphoil, SEQ=Single Equalizer)

Flange x Flange H Style Manifold

Direct Mount 'H' Type with drain/vent for differential pressure measurement.

Instrument manifolds available with 3 & 5 valve design.

The flanged inlet allows a futbol type adaptor to connect the inlets to the manifold with ½" tube fittings or pipe.

- 316/316L stainless steel body, stem and trim
- 6000 psig @ 1000 F (414 bar @ 380 C)
- Non-rotating trim provides bubble tight shut-off
- Flange o-rings and mounting bolts included with manifold
- PTFE Packing, with optional graphoil packing available
- NACE Certified
- CRN's available upon request
- Other materials available, see factory for details

Available with 3 & 5 valves

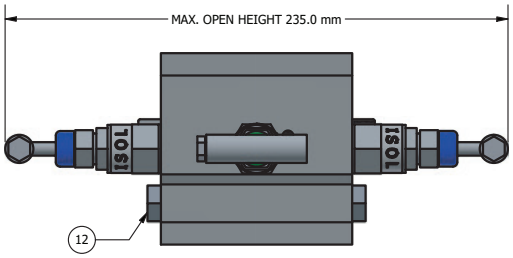

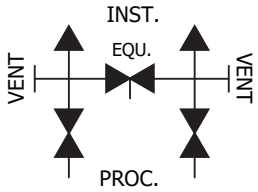

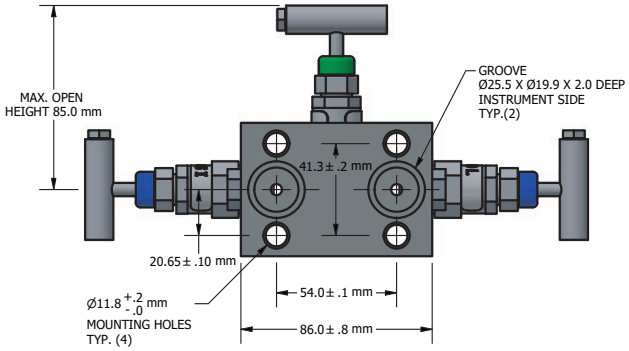

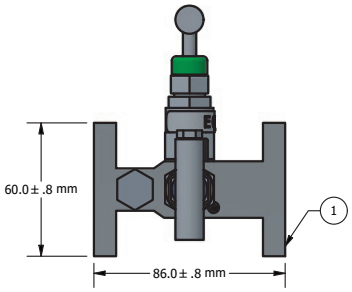

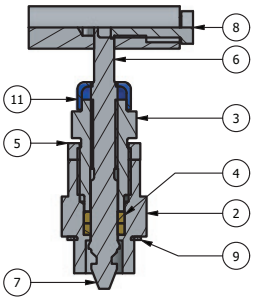

M-3H-L-DM-FLG-P-IEC shown, for a complete list of valves see page 32.

PART NO.	PART DESCRIPTION	MATERIAL	QTY.
1	BODY	316/316L SS NACE	1
2	GLAND BODY	316/316L SS NACE	3
3	GLAND RETAINER	304/304L SS	3
4	GLAND SEAL	P.T.F.E.	6
5	CHECK NUT	304/304L SS	3
6	SPINDLE	316/316L SS NACE	3
7	TRIM	316/316L SS NACE	3
8	HANDLE	304/304L SS	3
9	WASHER	316/316L SS NACE	3
10	LOCK PIN	316/316L SS	3
11	DUST CAP	PVC	3
12	DRAIN PLUG 1/4 NPT(M)	316/316L SS NACE	2

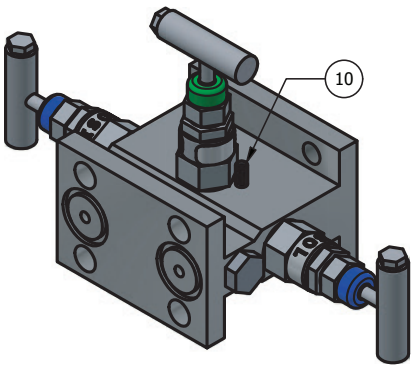

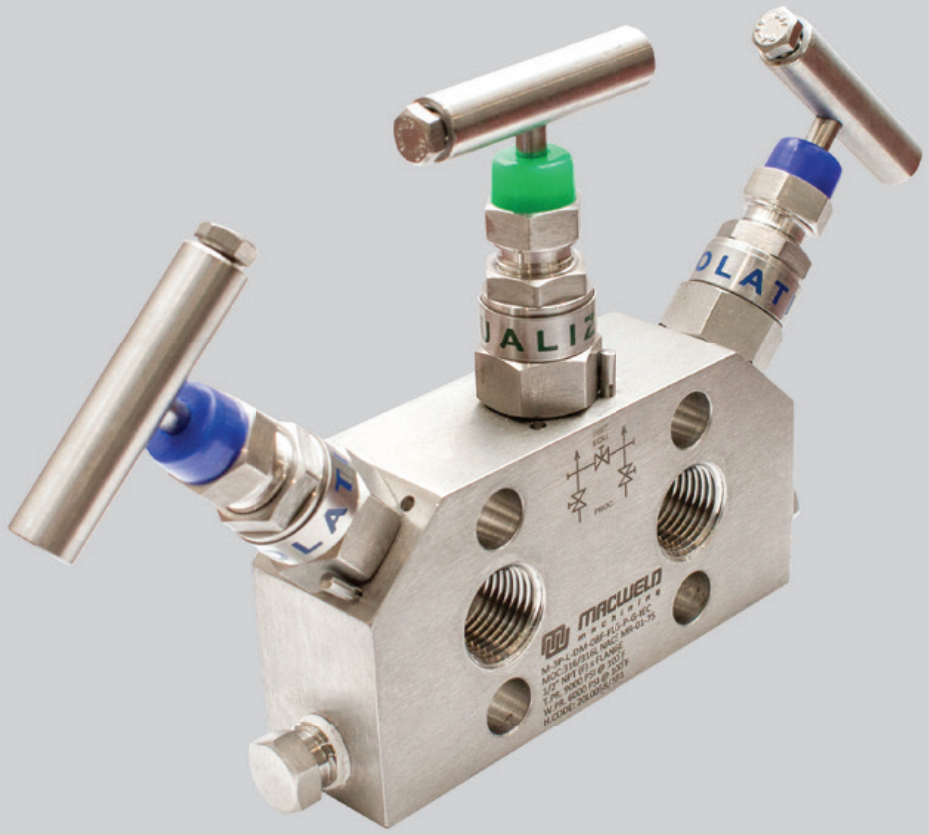

LOW PROFILE INSTRUMENT MANIFOLD

CRN Registered

Mac-Weld Part Number(s)

PART NUMBER	DESCRIPTION	MATERIAL	END CONNECTION (NPT or FLANGE)		Unit Weight (Kg)	DRAIN /VENT c/w PLUG
			INLET	OUTLET		
M-3P-L-DM-08F-FLG-P-G-IEC ●	3 Valve; 'low profile' style; Direct Mount, Graphoil, IEC Connections	316/316L	1/2" F	FLG	2.00	2 Plug(s)
M-3P-L-DM-08F-FLG-P-G-RT ●	3 Valve; 'low profile' style; Direct Mount, Graphoil, RT Connections	316/316L	1/2" F	FLG	2.00	2 Plug(s)
M-5P-L-DM-08F-FLG-P-G-IEC-SEQ ●	5 Valve; 'low profile' style; Direct Mount, IEC Connections, Single Equalizer	316/316L	1/2" F	FLG	3.00	2 Plug(s)
M-5P-L-DM-08F-FLG-P-G-RT-SEQ ●	5 Valve; 'low profile' style; Direct Mount, RT Connections, Single Equalizer	316/316L	1/2" F	FLG	3.00	2 Plug(s)

(●=CRN product, M=Male, F=Female, FLG=Flange, G=Graphoil, SEQ=Single Equalizer)

Low Profile Instrument Manifold

Direct mount design eliminates the need for mounting flange

Manifolds available in 2, 3 & 5 valve configurations.

This Low-Profile manifold is a Direct Mount with ½" FNPT inlet & either IEC grooved outlets or in a Rosemount Coplanar style.

- 6000 psig @ 1000 F (414 bar @ 380 C)
- 316/316L stainless steel body, stem and trim
- PTFE Packing, with standard graphoil packing
- NACE Certified
- CRN's available upon request
- Other materials available, see factory for details

Available with 3 & 5 valves

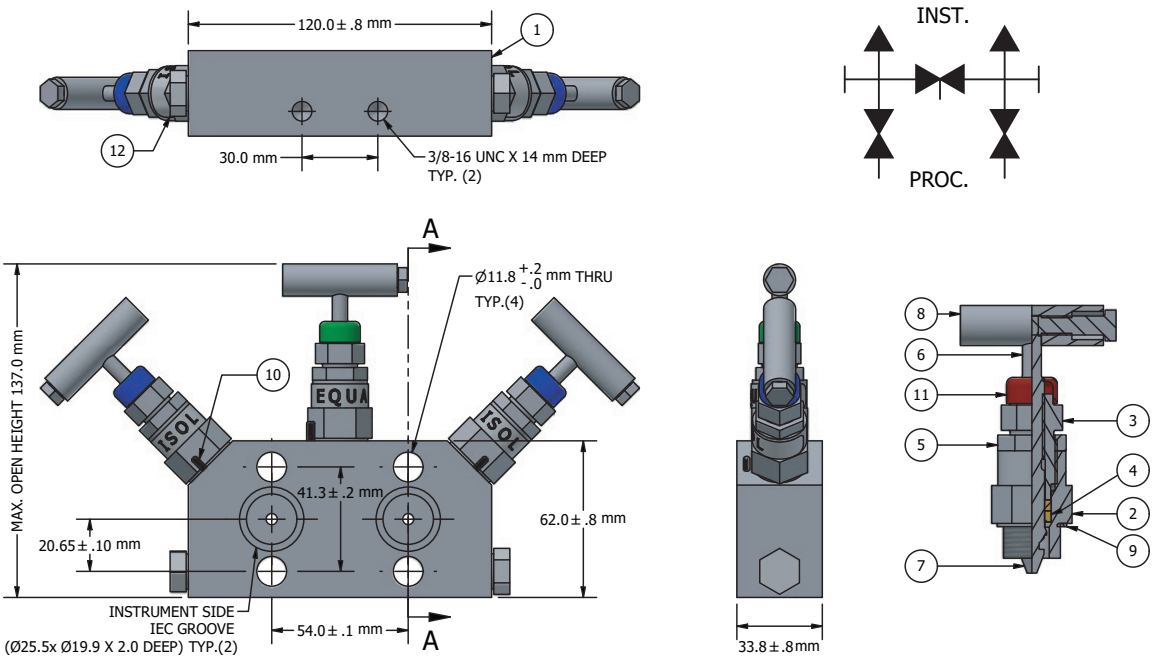

M-3P-L-DM-08F-FLG-P-G-IEC shown, for a complete list of valves see page 32.

PART NO.	PART DESCRIPTION	MATERIAL	QTY.
1	BODY	316/316L SS NACE	1
2	GLAND BODY	316/316L SS NACE	3
3	GLAND RETAINER	304/304L SS	3
4	GLAND SEAL	GRAPHOIL	6
5	CHECK NUT	304/304L SS	3
6	SPINDLE	316/316L SS NACE	3
7	TRIM	316/316L SS NACE	3
8	HANDLE	304/304L SS	3
9	WASHER	316/316L SS NACE	3
10	LOCK PIN	316/316L SS	3
11	DUST CAP	PVC	3
12	DRAIN PLUG 1/4 NPT(M)	316/316L SS NACE	2

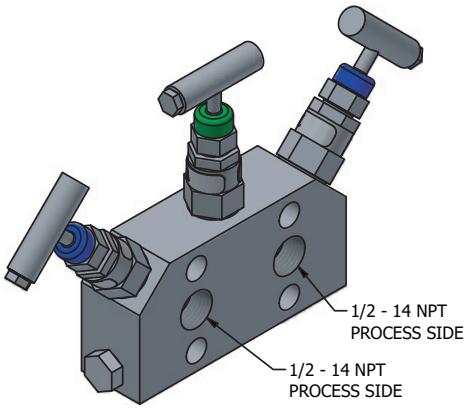

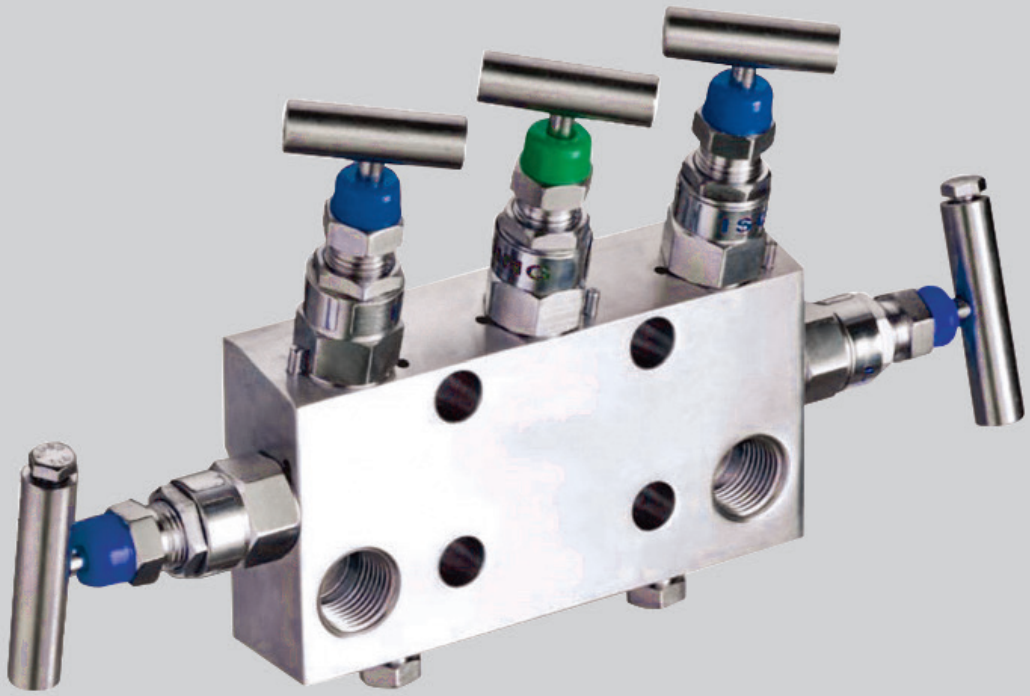

5-VALVE BAR TYPE MANIFOLD SINGLE EQUALIZER

CRN Registered

Mac-Weld Part Number(s)

PART NUMBER	DESCRIPTION	MATERIAL	END CONNECTION (NPT or FLANGE)		Unit Weight (Kg)	DRAIN /VENT c/w PLUG
			INLET	OUTLET		
M-5-L-DM-O8F-FLG-P-IEC-SEQ ●	5 Valve; Wafer/Bar Type; Direct Mount; Single Equalizer	316/316L	1/2" F	FLG	2.40	2 Plug(s)

(●=CRN product, M=Male, F=Female, FLG=Flange, G=Graphoil, SEQ=Single Equalizer)

5-Valve Bar Type Manifold

Remote Mount with Drain

Mac-Weld's 5-Valve Bar Type Manifold is direct mount for differential pressure instrument applications.

Standard manifold configuration is one equalizer valve positioned between two isolation valves. Additionally, two drain/vent ports are provided.

- 316/316L Stainless Steel Body, stem and trim
- 6000 psig @ 100°F (414 bar @ 38°C)
- PTFE Packing, with optional graphoil packing available
- Non-rotating trim provides bubble tight shut-off
- NACE Certified
- Flange 0-rings and mounting bolts included with manifold

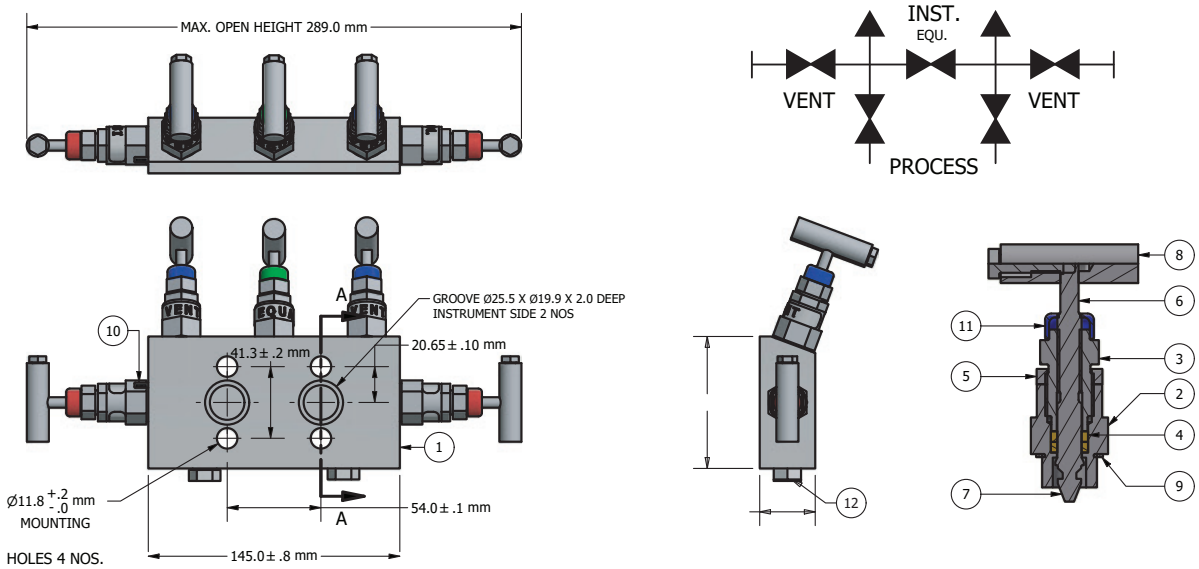

M-5-L-DM-08F-FLG-P-IEC-SEQ shown, for a complete list of valves see page 32.

PART NO.	PART DESCRIPTION	MATERIAL	QTY.
1	BODY	316/316L SS NACE	1
2	GLAND BODY	316/316L SS NACE	5
3	GLAND RETAINER	304/304L SS	5
4	GLAND SEAL	P.T.F.E.	10
5	CHECK NUT	304/304L SS	5
6	SPINDLE	316/316L SS NACE	5
7	TRIM	316/316L SS NACE	5
8	HANDLE	304/304L SS	5
9	WASHER	316/316L SS NACE	5
10	LOCK PIN	316/316L SS	5
11	DUST CAP	PVC	5
12	DRAIN PLUG 1/4" NPT (M)	316/316L SS NACE	2

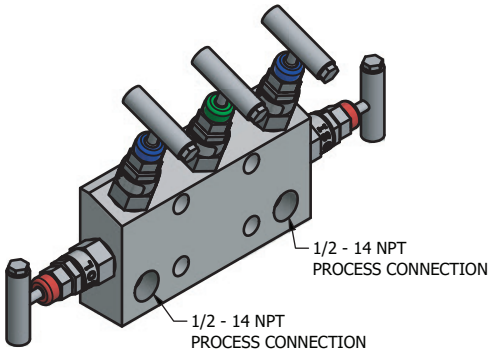

5-VALVE "T" TYPE MANIFOLD

CRN Registered

Mac-Weld Part Number(s)						
PART NUMBER	DESCRIPTION	MATERIAL	END CONNECTION (NPT or FLANGE)		Unit Weight (Kg)	DRAIN /VENT c/w PLUG
			INLET	OUTLET		
M-5T-L-DM-08F-FLG-P-IEC-SEQ ●	5 Valve; 'T' Style; Direct Mount, Single Equalizer	316/316L	1/2" F	FLG	2.80	2 Plug(s)

(●=CRN product, M=Male, F=Female, FLG=Flange, G=Graphoil, SEQ=Single Equalizer)

5-Valve "T" Type Manifold

Remote Mount with Drain

Mac-Weld's 5-Valve Direct Mount 'T' Type Manifold with drain/vent for differential pressure instrumentation.

The manifold has one equalizer valve, two isolation valves, two vent valves and drain/vent ports.

- 316/316L Stainless Steel Body, stem and trim
- 6000 psig @ 100°F (414 bar @ 38°C)
- PTFE Packing, with optional graphoil packing available
- Non-rotating trim provides bubble tight shut-off
- Flange 0-rings and mounting bolts included with manifold
- NACE Certified

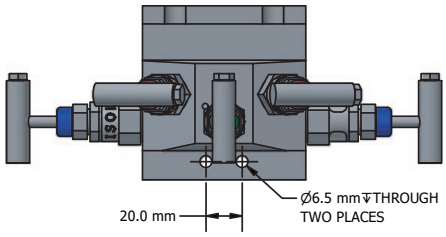

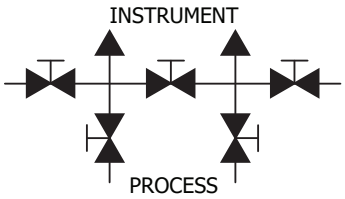

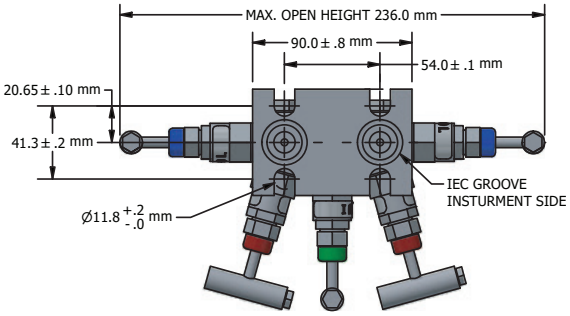

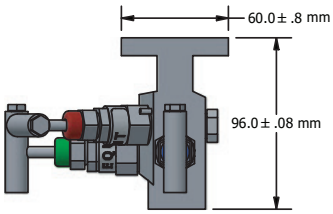

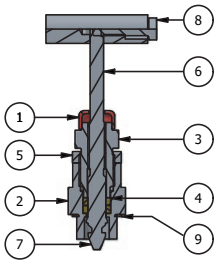

M-5T-L-DM-08F-FLG-P-IEC shown, for a complete list of valves see page 32.

PART NO.	PART DESCRIPTION	MATERIAL	QTY.
1	BODY	316/316L SS NACE	1
2	GLAND BODY	316/316L SS NACE	5
3	GLAND RETAINER	304/304L SS	5
4	GLAND SEAL	P.T.F.E.	10
5	CHECK NUT	304/304L SS	5
6	SPINDLE	316/316L SS NACE	5
7	TRIM	316/316L SS NACE	5
8	HANDLE	304/304L SS	5
9	WASHER	316/316L SS NACE	5
10	LOCK PIN	304/304L SS	5
11	DUST CAP	PVC	5
12	DRAIN PLUG 1/4" NPT (M)	316/316L SS NACE	2

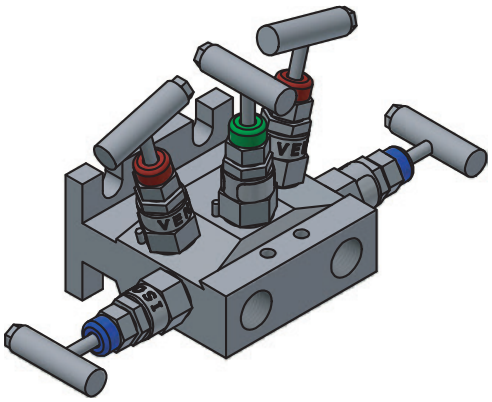

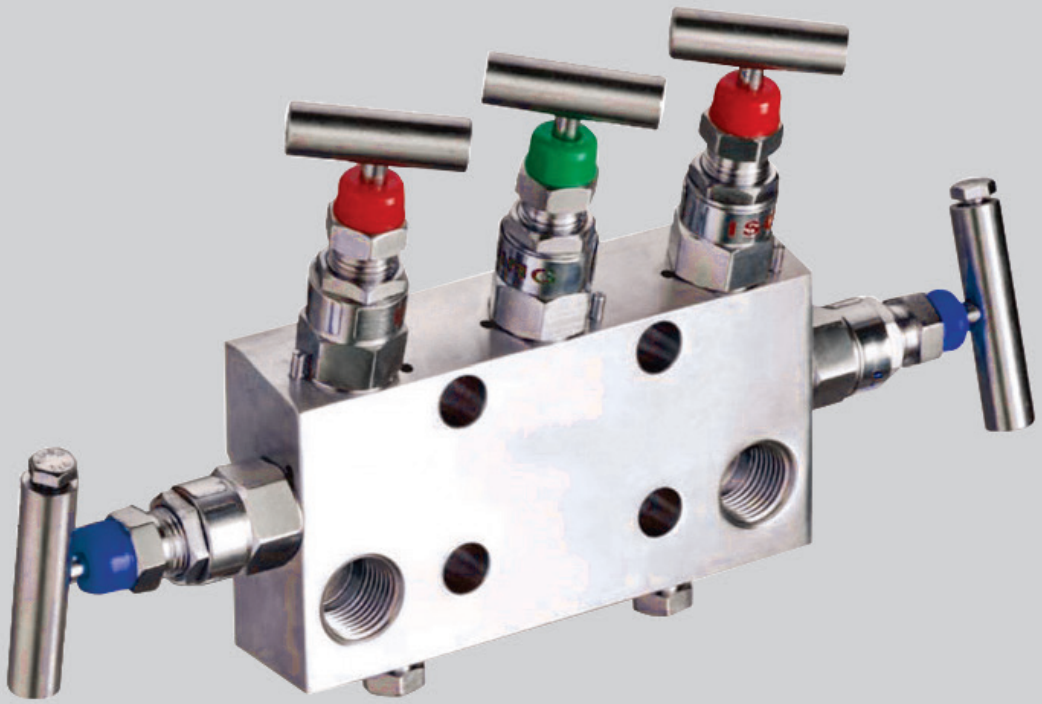

5-VALVE BAR / WAFER TYPE MANIFOLD

CRN Registered

Mac-Weld Part Number(s)						
PART NUMBER	DESCRIPTION	MATERIAL	END CONNECTION (NPT or FLANGE)		Unit Weight (Kg)	DRAIN /VENT c/w PLUG
			INLET	OUTLET		
M-5-L-RM-08F-08F-P ●	5 Valve; Bar/Wafer Style; Remote Mount	316/316L	1/2" F	1/2" F	1.13	2 Plug(s)

(●=CRN product, M=Male, F=Female, FLG=Flange, G=Graphoil, SEQ=Single Equalizer)

5-Valve Bar / Wafer Type Manifold

Remote Mount with Drain

Mac-Weld's 5-Valve Bar/Wafer Type remote mount Manifold is designed for differential pressure instrument applications.

Standard manifold configuration is one equalizer valve positioned between two isolation valves. Additionally, two drain/vent ports are provided.

- 316/316L Stainless Steel Body, stem and trim
- 6000 psig @ 100°F (414 bar @ 38°C)
- PTFE Packing, with optional graphoil packing available
- Non-rotating trim provides bubble tight shut-off
- NACE certified

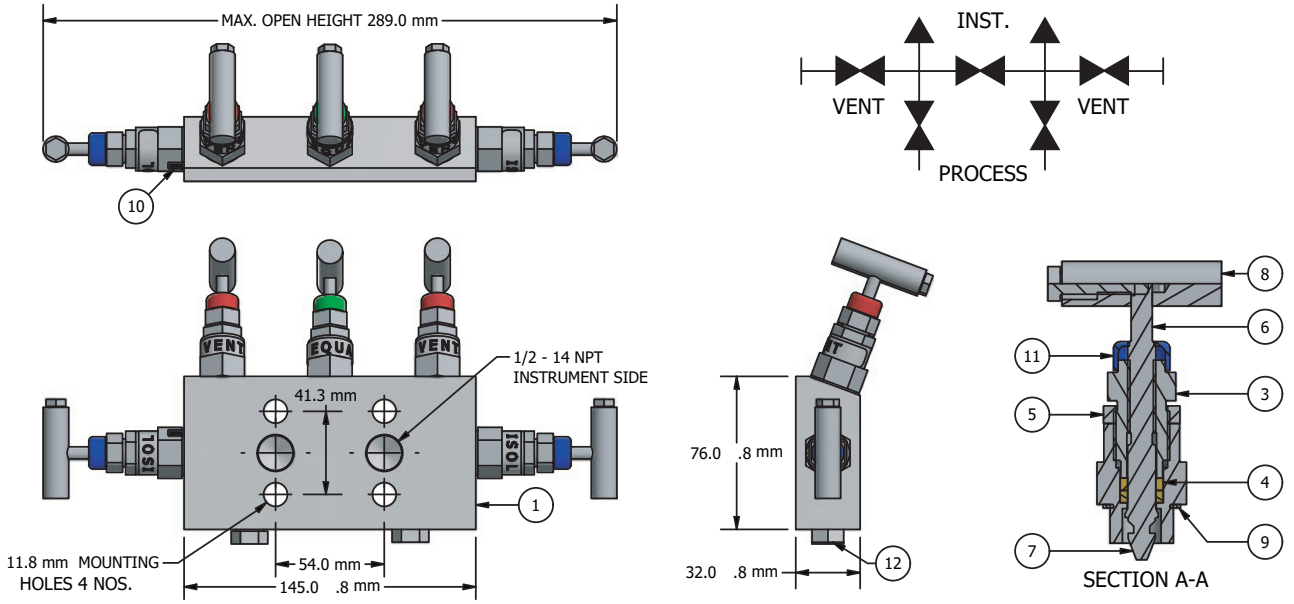

M-5-L-RM-08F-08F-P shown, for a complete list of valves see page 32.

PART NO.	PART DESCRIPTION	MATERIAL	QTY.
1	BODY	316/316L SS NACE	1
2	GLAND BODY	316/316L SS NACE	5
3	GLAND RETAINER	304/304L SS	5
4	GLAND SEAL	P.T.F.E.	10
5	CHECK NUT	304/304L SS	5
6	SPINDLE	316/316L SS NACE	5
7	TRIM	316/316L SS NACE	5
8	HANDLE	304/304L SS	5
9	WASHER	316/316L SS NACE	5
10	LOCK PIN	316/316L SS	5
11	DUST CAP	PVC	5
12	DRAIN PLUG 1/4" NPT (M)	316/316L SS NACE	2

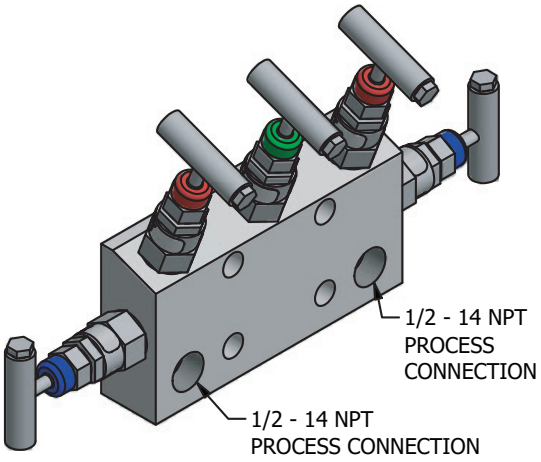

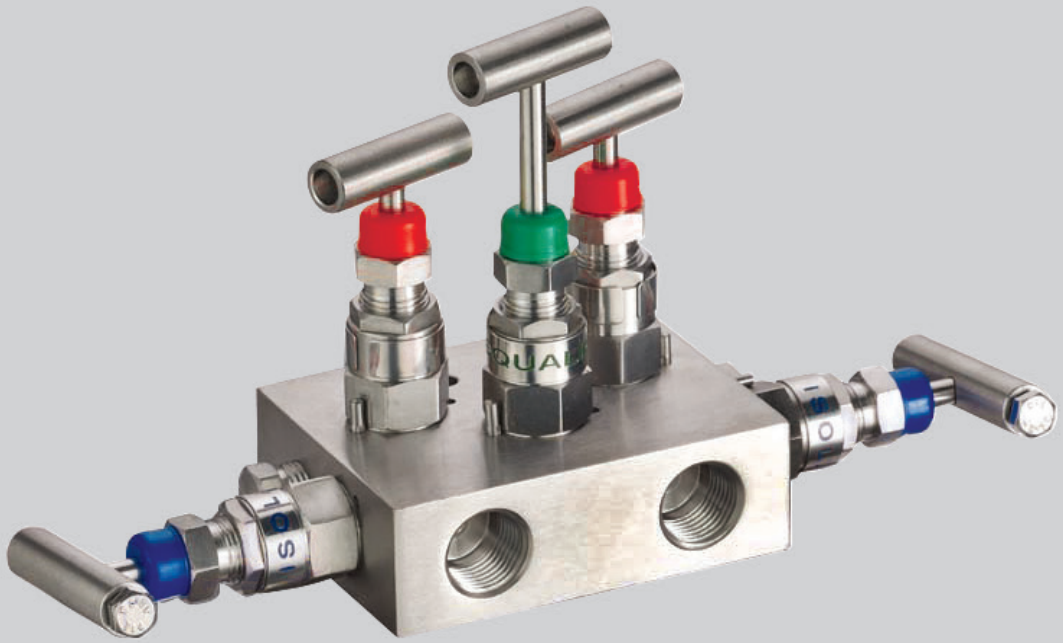

5-VALVE MANIFOLD

Mac-Weld Part Number(s)						
PART NUMBER	DESCRIPTION	MATERIAL	END CONNECTION (NPT or FLANGE)		Unit Weight (Kg)	DRAIN /VENT c/w PLUG
			INLET	OUTLET		
M-5C-L-RM-08F-08F-P	5 Valve; Horizontal; Remote Mount	316/316L	1/2" F	1/2" F	1.13	2 Plug(s)

(M=Male, F=Female, FLG=Flange, G=Graphoil, SEQ=Single Equalizer)

5-Valve Manifold

Remote Mount with Drain

Mac-Weld's 5-Valve Remote Mount Manifold with drain/vent for differential pressure instrumentation. The manifold has one equalizer valve, two isolation valves and two drain/vent ports.

- 316/316L Stainless Steel Body, stem and trim
- 6000 psig @ 100°F (414 bar @ 38°C)
- Non-rotating trim provides bubble tight shut-off
- PTFE Packing, with optional graphoil packing available
- NACE certified

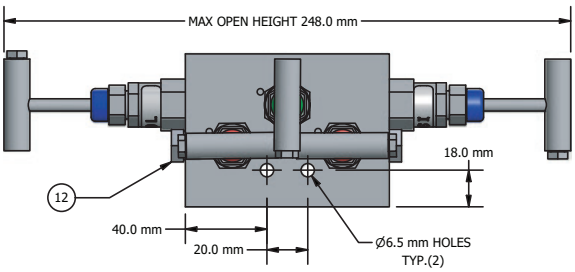

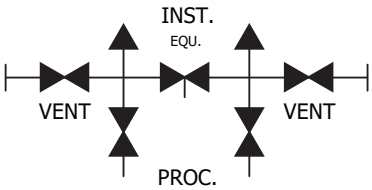

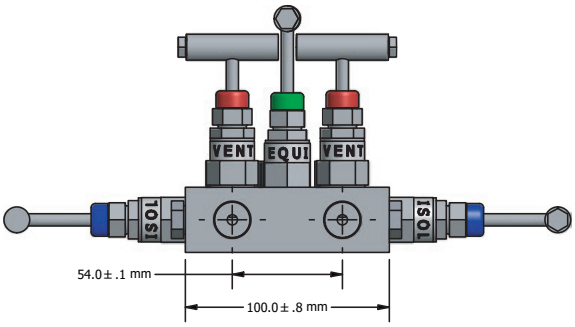

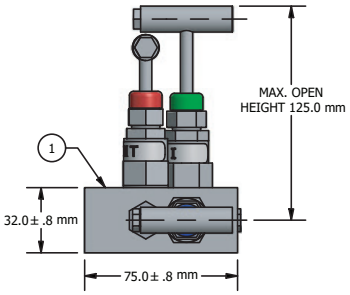

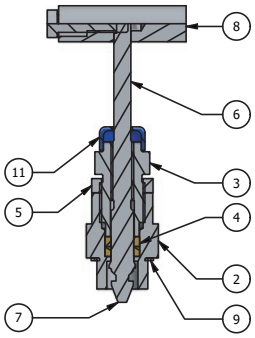

M-5C-L-RM-08F-08F-P shown, for a complete list of valves see page 32.

PART NO.	PART DESCRIPTION	MATERIAL	QTY.
1	BODY	316/316L SS NACE	1
2	GLAND BODY	316/316L SS NACE	5
3	GLAND RETAINER	304/304L SS	5
4	GLAND SEAL	P.T.F.E.	10
5	CHECK NUT	304/304L SS	5
6	SPINDLE	316/316L SS NACE	5
7	TRIM	316/316L SS NACE	5
8	HANDLE	304/304L SS	5
9	WASHER	316/316L SS NACE	5
10	LOCK PIN	316/316L SS	5
11	DUST CAP	PVC	5
12	DRAIN PLUG 1/4" NPT (F)	316/316L SS NACE	2

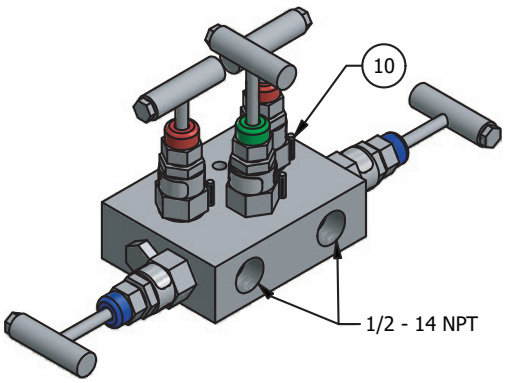

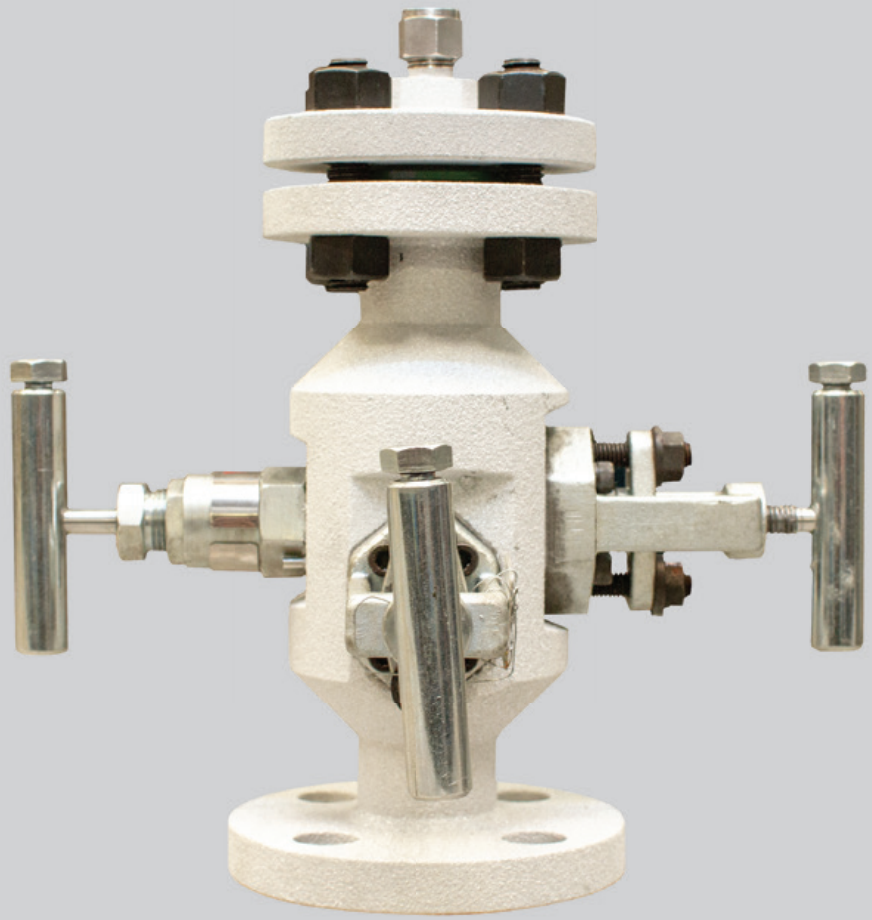

DOUBLE BLOCK AND BLEED

Double Block and Bleed *(1 component)*

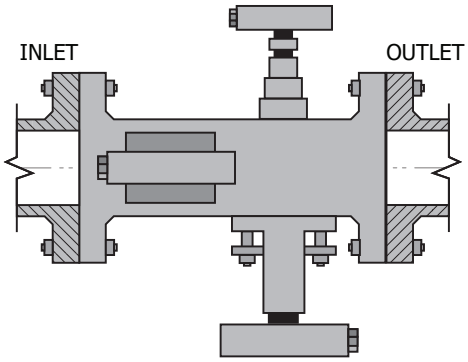

Standard Assembly *(3 components)*

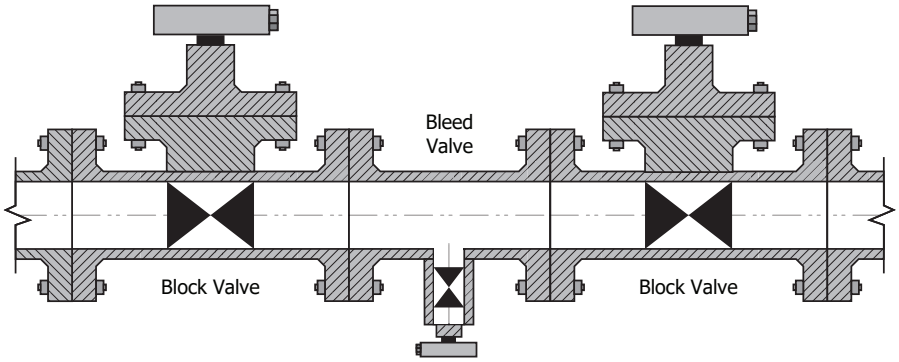

Double Block and Bleed

Isolate instruments from the process, while saving space and installation time

These units allow for easier maintenance, flow diversion and sampling, as well as reducing size and weight to the process line.

All our DBB valves assemblies are custom built to suit our clients requirements, with numerous configurations and options available. Mac-Weld double block and bleed valves are manufactured in accordance with ASME standards.

All valves are tested and inspected at our factory, giving our customers peace of mind when the product arrives on site for installation.

- The Mac-Weld DBB manifold is a complete Double Block and Bleed assembly to keep instruments separate from the process.
- Single unit replaces separate valves and reduces installation time as well as saving space.
- Two Block Valves are used to achieve isolation while the Needle Valve and Bleed Port provides pressure relief.
- Various flange sizes, pressure classes, pipe sizes, valve types, connections and materials are available.
- CRN and MTR are available

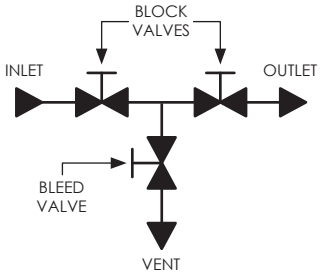

Examples of Double Block and Bleed Valve Connections

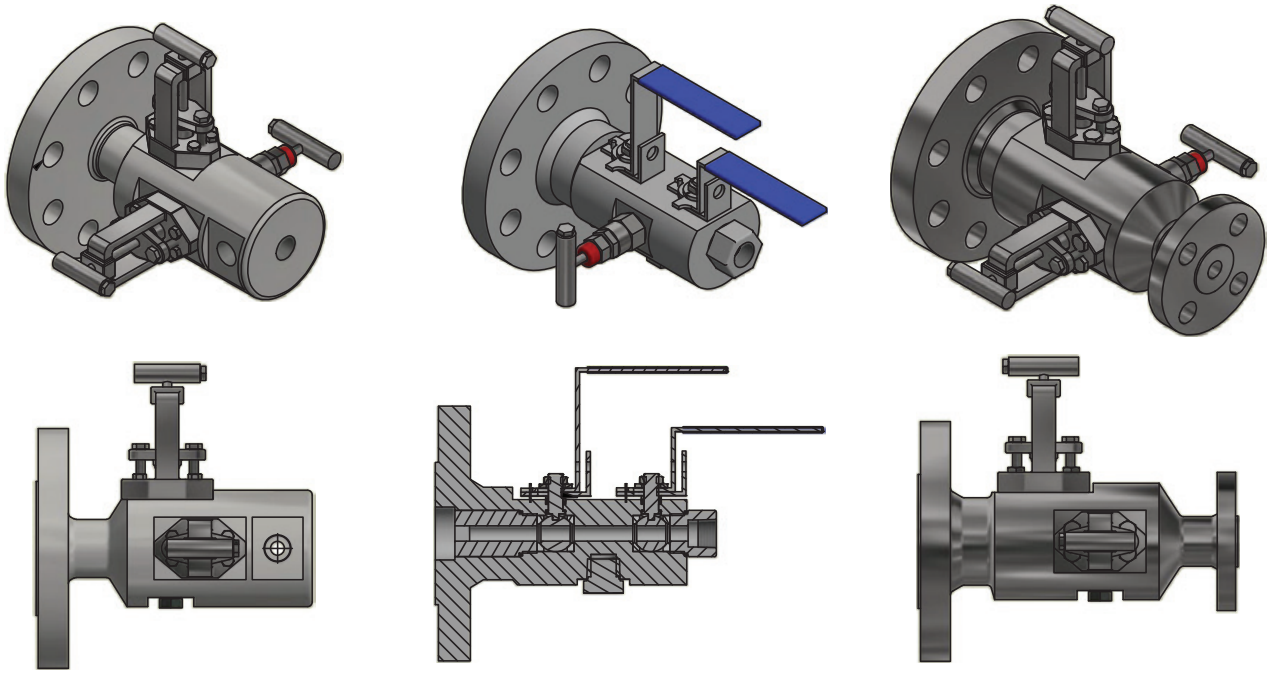

Outlet Adapter
3 OFF 1/2" - 14 NPT
(with needle valves)

Outlet Adapter
1/2" - 14 NPT
(with ball valves)

Outlet Adapter
Flange; rating & size as required
(with needle valves)

Mac-Weld CRN Instrument Manifold List

PART NUMBER	DESCRIPTION	END CONNECTION (NPT or FLANGE)		Design Temp (°F)	Design Pressure (PSIG)
		INLET	OUTLET		
M-2C-X-RM-08F-08F-P	2 VALVE MANIFOLD SEPARATELY MOUNTED - 1/2" NPT (F) x 1/2" NPT (F)	1/2" F	1/2" F	100	6000
M-2C-X-RM-08F-08F-P-SP	2 VALVE MANIFOLD SEPARATELY MOUNTED - 1/2" NPT (F) x 1/2" NPT (F)	1/2" F	1/2" F	100	6000
M-2GV-X-DM-08F-08F-P	2 VALVE B&B GAUGE VALVE - 1/2" NPT (F) x 1/2" NPT (F) WITH 1/4" NPT (F) DRAIN	1/2" F	1/2" F	100	6000
M-2GV-X-DM-08F-08M-P	2 VALVE MANIFOLD - 1/2" NPT (F) x 1/2" NPT (M) WITH 1/4" NPT (F) DRAIN	1/2" F	1/2" M	100	6000
M-2GV-X-DM-08M-08F-P	2 VALVE B&B GAUGE VALVE - 1/2" NPT (M) x 1/2" NPT (F) WITH 1/4" NPT (F) DRAIN	1/2" M	1/2" F	100	6000
M-2GV-X-DM-08M-08M-P	2 VALVE B&B GAUGE VALVE - 1/2" NPT (M) x 1/2" NPT (M) WITH 1/4" NPT (F) DRAIN	1/2" M	1/2" M	100	6000
M-2GV-X-DM-12M-08F-P	2 VALVE B&B GAUGE VALVE - 3/4" NPT (M) x 1/2" NPT (F) WITH 1/4" NPT (F) DRAIN	3/4" M	1/2" F	100	6000
M-2H-X-DM-FLG-FLG-P-IEC	2 VALVE MANIFOLD "H" TYPE WITH DRAIN - EQU. FLANGE X FLANGE	FLG	FLG	100	6000
M-2P-X-DM-08F-FLG-P-G-IEC	2 WAY COPLANAR MANIFOLD - 1/2" NPT(F) X GROOVE	1/2" F	GRV	100	6000
M-2P-X-DM-08F-FLG-P-G-RT	2 WAY COPLANAR MANIFOLD - 1/2" NPT(F) X GROOVE	1/2" F	GRV	100	6000
M-2T-X-DM-08F-FLG-P-IEC	2 VALVE T-TYPE INTEGRAL - 1/2" NPT(F) X FLANGED	1/2" F	FLG	100	6000
M-2GV-X-DM-XXM-XXF-P-10	2 VALVE B&B GAUGE VALVE - 1/2" NPT (M) x 1/2" NPT (F) WITH 1/4" NPT (F) DRAIN	1/2" M	1/2" F	100	10000
M-2GV-X-DM-08M-08M-P-10	2 VALVE B&B GAUGE VALVE - 1/2" NPT (M) x 1/2" NPT (M) WITH 1/4" NPT (F) DRAIN	1/2" M	1/2" M	100	10000
M-3BB-X-RM-08F-08F-V08F	BLOCK & BLEED MANIFOLD - 1/2" NPT(F) x 1/2" NPT(F)	1/2" F	1/2" F	100	6000
M-3BB-X-RM-08SW-08F-V08F	BLOCK & BLEED MANIFOLD - NB(SW) x 1/2" NPT(F)	NB SW	NPT F	100	6000
M-3C-X-RM-08F-08F-P-CRN	3 VALVE MANIFOLD FLAT TYPE WITH DRAIN - EQU. 1/2" NPT(F) X 1/2" NPT(F)	1/2" F	1/2" F	100	6000
M-3GV-X-DM-08M-08F-P	BLOCK & BLEED MANIFOLD - 1/2" NPT(M) x 1/2" NPT(F)	1/2" M	1/2" F	100	6000
M-3H-X-DM-FLG-FLG-P-IEC	3 VALVE MANIFOLD "H" TYPE WITH DRAIN - EQU. FLANGE X FLANGE	FLG	FLG	100	6000
M-3P-X-DM-08F-FLG-P-G-IEC	3 WAY COPLANAR MANIFOLD - 1/2" NPT(F) X FLANGE	1/2" F	FLG	100	6000
M-3P-X-DM-08F-FLG-P-G-RT	3 WAY COPLANAR MANIFOLD - 1/2" NPT(F) X GROOVE	1/2" F	GRV	100	6000
M-3T-X-DM-08F-FLG-P-IEC	3 VALVE MANIFOLD "T" TYPE WITH DRAIN - 1/2" NPT(F) X FLANGE	1/2" F	FLG	100	6000
M-5C-X-RM-08F-08F-PB-V04F	5 VALVE MANIFOLD FLAT TYPE - 1/2" NPT(F) X 1/2" NPT(F)	1/2" F	1/2" F	100	6000
M-5C-X-RM-08F-08F-PB-V04F	5 VALVE MANIFOLD FLAT DOUBLE - EQUALIZER TYPE 1/2" NPT(F) X 1/2" NPT(F)	1/2" F	1/2" F	100	6000
M-5C-X-RM-08F-08F-P-DELRING	5 VALVE MANIFOLD FLAT TYPE - 1/2" NPT(F) X 1/2" NPT(F)	1/2" F	1/2" F	100	6000
M-5H-X-DM-FLG-FLG-P-IEC-4SMH-SEQ	5 VALVE MANIFOLD "H" TYPE - FLANGE X FLANGE	FLG	FLG	100	6000
M-5-X-DM-08F-FLG-P-IEC-SEQ	5 VALVE MANIFOLD BAR TYPE WITH DRAIN - 1/2" NPT(F) X FLANGED	1/2" F	FLG	100	6000
M-5-X-RM-08F-08F-P	5 VALVE MANIFOLD BAR TYPE WITH DRAIN - 1/2" NPT(F) X 1/2" NPT(F)	1/2" F	1/2" F	100	6000
M-5P-X-DM-08F-FLG-P-DELRIN-IEC-DEQ	5 VALVE MANIFOLD COPLANAR - 1/2" NPT (F) X FLANGED (DUAL EQUALIZER)	1/2" F	FLG	100	6000
M-5P-X-DM-08F-FLG-P-G-IEC-SEQ	5 VALVE MANIFOLD COPLANAR - 1/2" NPT (F) X FLANGED	1/2" F	FLG	100	6000
M-5P-X-DM-08F-FLG-P-G-RT-DEQ	5 VALVE MANIFOLD COPLANAR - 1/2" NPT X FLANGED	1/2" F	FLG	100	6000
M-5P-X-DM-08F-FLG-P-G-RT-SEQ	5 VALVE MANIFOLD COPLANAR - 1/2" NPT X FLANGED	1/2" F	FLG	100	6000
M-5P-X-DM-08F-FLG-P-IEC-DEQ	5 VALVE MANIFOLD COPLANAR - 1/2" NPT (F) X FLANGED (DUAL EQUALIZER)	1/2" F	FLG	100	6000
M-5T-X-DM-08F-FLG-PB-IEC-4SMH-DEQ	5 VALVE MANIFOLD "T" TYPE - 1/2" NPT(F) X FLANGE	1/2" F	FLG	100	6000
M-5T-X-DM-08F-FLG-P-IEC-4SMH-SEQ	5 VALVE MANIFOLD "T" TYPE - 1/2" NPT(F) X FLANGE	1/2" F	FLG	100	6000
50V015VFSS86	5 VALVE MANIFOLD REMOTE MOUNT - 1/2" NPT (F) X 1/4" NPT (M) SWIVEL GAUGE	1/2" F	1/4" M	100	6000
50V033VFSS86	3 VALVE MANIFOLD REMOTE MOUNT - 1/2" NPT (F) X 1/4" NPT (M) SWIVEL GAUGE	1/2" F	1/4" M	100	6000
FF-L2-0.500-B	1/2" NB (SW) SCH. 80 x FLANGE FOOTBALL ADAPTOR (CRN applies to 316/L only)	-	-	100	6000
FF-L2-0.500-D	1/2" NB (SW) SCH. 80 x FLANGE FOOTBALL ADAPTOR (CRN applies to 316/L only)	-	-	100	6000
FF-L2-0.500-F	1/2" NB (SW) SCH. 80 x FLANGE FOOTBALL ADAPTOR (CRN applies to 316/L only)	-	-	100	6000

CRN applies to the following materials: 316/316L, C-276, Carbon Steel and F51.

Material availability and lead times will vary, see factory for details.

Components of a Valve

Manifold valve breakdown

Threaded Bonnet

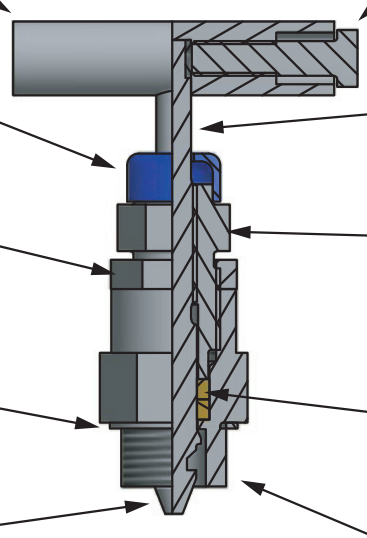

Valve Dust Cap Colours

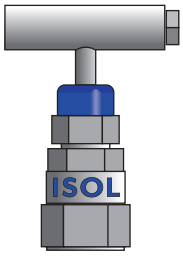

Blue Dust Cap
Isolation Valve Handle

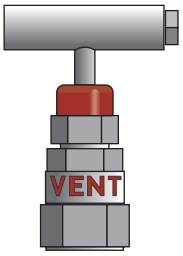

Red Dust Cap
Drain/Vent Valve Handle

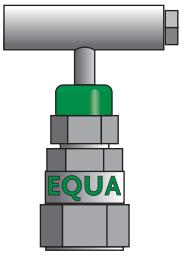

Green Dust Cap
Equalizer Valve Handle

Options & Accessories

Our manifold valves are available with a variety of add-ons.

- Oxygen Cleaning
- Hydrogen Service
- Anti-Tamper Versions
- Graphoil Packing
- Mounting Kit; U Bolt
- Mounting Kit: Versa-Mount
- Oval Flange Adapter
- Locking Versions
- Extended Handles

Call your Mac-Weld sales representative today for more information 519-332-1388.

Materials & Testing

Materials

Operating Pressure

The recommended operating pressure for our 316/316L, Hastelloy, Carbon Steel and Duples Stainless Steel valves is 6,000 psig (414 barg).

Select valves are also available with a 10,000 psig (689 barg) pressure rating.

Gland Packing Materials

The standard packing and flange o-ring material for all Mac-Weld valves is polytetrafluoroethylene (PTFE). The maximum operating temperature is 464°F (240°C). Graphoil packing is available for temperatures above 464° F (240°C).

Cleaning

Mac-Weld instrument valve and manifold components are cleaned during the manufacturing process. Upon final assembly and testing each valve manifold undergoes a final cleaning and drying.

Testing

Mac-Weld valve manifolds are factory tested in accordance to the following:

ASME B31.3 and ASME B31.1

Hydrostatic (Body)

Tested at room temperature (Not exceeding 38°C/100°F)

9000 psig | 6000# rated valves
15000 psig | 10000# rated valves

Hydrostatic (Seat)

Tested at room temperature (Not exceeding 38°C/100°F)

6600 psig | 6000# rated valves
11000 psig | 10000# rated valves

Pneumatic seat testing is done at 7kg/cm² for all valves, unless specified

MANIFOLD BODY

MATERIAL	BAR STOCK	FORGING	UNS
316/316L SS	ASME A479 316	ASME A182 F316	S31600
Carbon Steel	A105	A105	K03504
Duples Stainless Steel	A479 S31803/S32205	A182 F51	S31803/S32205
Hastelloy	B574 Gr.N10276	B462 Gr.N10276	N10276

FLANGE MOUNTING COMPONENTS

FLANGE O-RINGS	BOLTS
Polytetrafluoroethylene (PTFE)	304/304L SS
Graphoil	304/304L SS

Other O-ring & bolt materials available, see factory for details.

A Note on Safe Product Selection:

Customer to select suitable product type and size based on the application considering the overall system design.

For safe, easy and trouble-free operation the customer must consider material compatibility, temperature and pressure ratings when selecting a product.

MAWP vs Temperature Charts

Comparing PTFE/Graphoil gasket ratings for A105 and 316SS

PTFE Gaskets

A105 with PTFE Gaskets

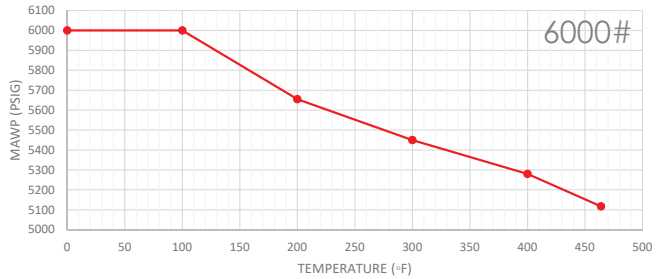

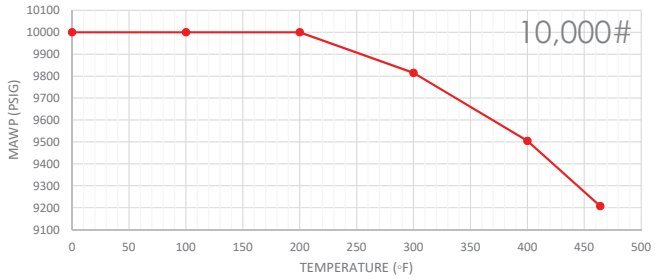

316SS with PTFE Gaskets

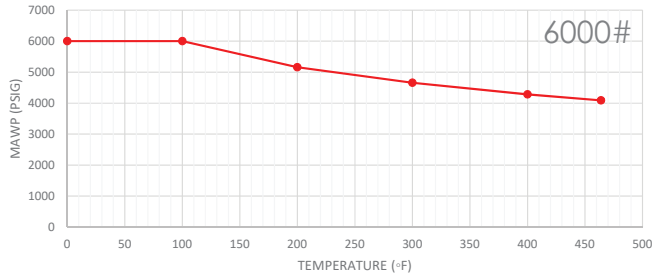

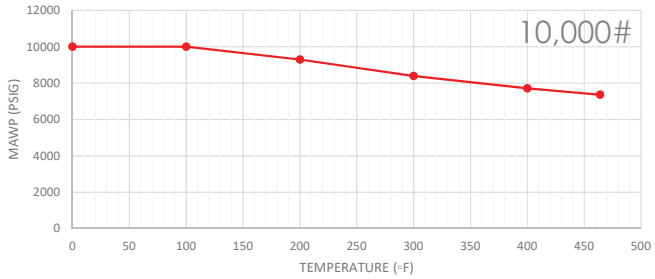

Graphoil Gaskets

A105 with Graphoil Gaskets

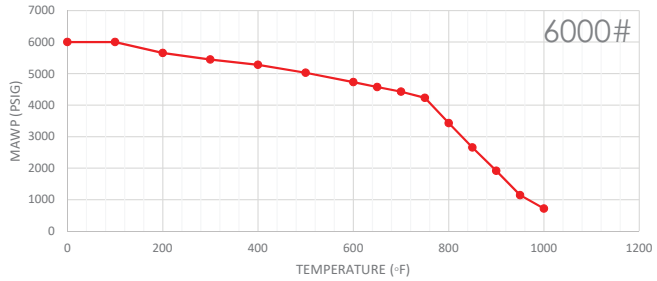

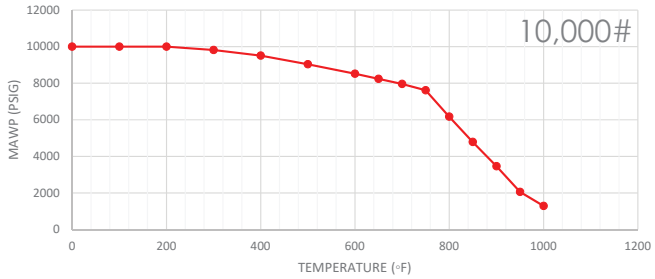

316SS with Graphoil Gaskets

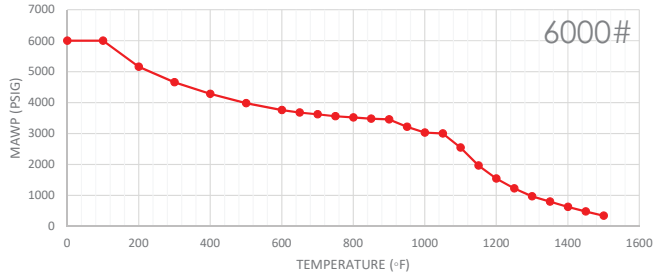

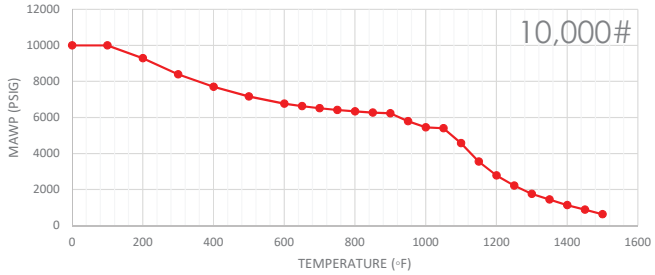

MACWELD
machining

1324 Lougar Ave Sarnia, ON N7S 5N7 1-877-MAC-WELD (622-9353) sales@mac-weld.com