The promise of precision, every time.

MACWELD machining

www.mac-weld.com

Revised (04/26/2022)

Bleed Rings

Designed to fit between ANSI flanges within the bolt circle

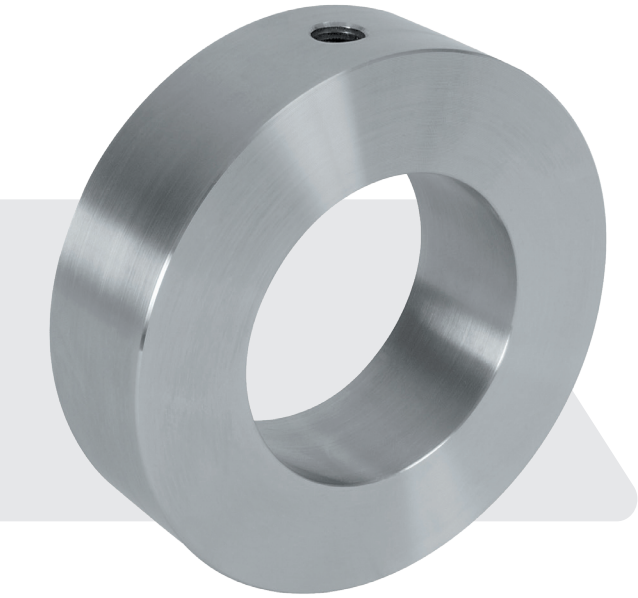

Bleed rings provide a convenient way of attaching valves or other instruments to piping systems, along with providing access for sampling or drainage.

Our Bleed (drip) Rings allow for venting and purging of piping systems. They are designed to fit between flanges. Available in various flange sizes and ratings. Complete with one or two bleed ports in threaded or socket weld connections.

ISO-9001:2015 certification and meeting all applicable codes and government regulations. All Bleed rings are quality checked and tested to code, prior to being shipped.

Specifications:

- Manufactured 100% in house and can be modified to suit your application.
- Reduces installation and maintenance costs.
- Allows for on site calibration, venting & purging.
- Can be used as a spacer for piping systems
- Bleed Rings are available with specified instrument valves upon request.
- Canadian Registration Numbers (CRN) available for some materials

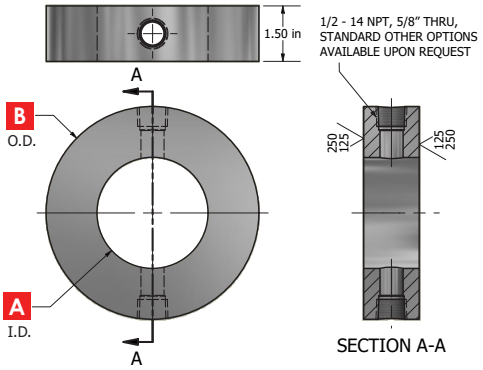

Available in carbon steel, A105, 304/L, 316/L and most alloy materials.

Pipe Size/ANSI Class/Dimensions (Dimensions in inches)

Pipe Size	150#		300#		600#		900#		1500#		2500#	
	A	B	A	B	A	B	A	B	A	B	A	B
0.75	0.75	1.688	0.75	1.688	0.75	1.688	0.75	1.688	0.75	1.688	0.75	1.688
1	1	2.5	1	2.75	1	2.75	1	3	1	3	1	3.25
1.5	1.5	3.25	1.5	3.625	1.5	3.625	1.5	3.625	1.5	3.75	1.5	4.5
2	2	4	2	4.25	2	4.25	2	5.5	2	5.5	2	5.625
2.5	2.5	4.75	2.5	5	2.5	5	2.5	6	2.5	6.375	2.5	6.5
3	3	5.25	3	5.75	3	5.75	3	6.5	3	6.75	3	7.625
4	4	6.75	4	7	4	7.5	4	8	4	8.125	4	9.125
5	5	7.625	5	8.375	5	9.375	5	10.25	5	9.875	5	10.875
6	6	8.625	6	9.75	6	10.375	6	11.25	6	11	6	12.375
8	8	10.875	8	12	8	12.25	8	14	8	13.75	8	15.125
10	10	13.25	10	14.25	10	15.625	10	17	10	17	10	18.625
12	12	16	12	16.5	12	17.875	12	19.5	12	20.375	12	21.5
14	13.25	17.625	13.25	19	13.25	19.25	13.25	20.375	13.25	22.625	-	-
16	15.25	20.125	15.25	21.125	15.25	22.125	15.25	22.5	15.25	25.125	-	-
18	17.25	21.5	17.25	23.375	17.25	24	17.25	25	17.25	27.625	-	-
20	19.25	23.75	19.25	25.625	19.25	26.75	19.25	27.375	19.25	29.625	-	-
24	23.25	28.125	23.25	30.375	23.25	31	23.25	32.875	23.25	35.375	-	-

1324 Lougar Ave Sarnia, ON N7S 5N7 | 1-877-MAC-WELD (622-9353) | sales@mac-weld.com | www.mac-weld.com

BLEED RINGS

BR	-	2	-	L2	-	150	-	2	-	AA	-	RTJ
1		2		3		4		5		6		7

1 Design

Code	Description
BR	Bleed Ring

2 Line Size Side #1

Code	Size
.5	1/2"
.75	3/4"
1	1"
1.5	1-1/2"
2	2"
2.5	2-1/2"
3	3"
4	4"
6	6"
8	8"
10	10"
12	12"
14	14"
16	16"
18	18"
20	20"
24	24"

3 Material

Code	Grade
C1	Aluminum 6061
D4	Carbon Steel A516Gr70
E1	Carbon Steel ASTM A105
E2	LF2
F1	Chrome-Moly-F11
F2	Duplex F51/2205
F6	Chrome-Moly-F5
F7	Chrome-Moly-F9
F8	Chrome-Moly-F91
G1	Chrome-M-Moly F22
H2	304/304L
H3	304H
J3	317L
K1	310
K2	310H
L2	316/316L
L3	316H
M1	321
M2	321H
M3	RA330
N1	347
N2	347H
N3	410
N4	446
N5	HR160
P1	Alloy 600
P2	Alloy 625
P3	Alloy 601
Q1	Alloy 825
Q2	Alloy 800
Q3	Alloy 800H/HP
R1	Alloy 400
R2	Alloy K500
S1	Alloy 200
S2	Alloy 20
S3	904L
S4	AL-6XN
T1	Tit Gr2
T2	Tit Gr5
T3	Tit Gr7
U1	Alloy C-276
U2	Alloy B2
U3	Alloy B3
U4	Alloy C-22
U5	Alloy X
W1	Teflon
Z1	ZIRC 702

4 Rating

Code	Size
150	150
300	300
600	600
900	900
1500	1500
2500	2500

5 Number of Ports

Code	Description
0	0
1	1
2	2
3	3
4	4

6 Port Size & Style

Code	Description
AA	1/2" NPT
AB	3/4" NPT
AR	1/4" NPT
BH	1/2" SW
BA	3/4" SW

7 Options

Code	Description
RTJ	RTJ Facing
NA	Not Applicable

FLUSH/BLEED RING COMPARISON

Flush Ring

OR

Bleed Ring

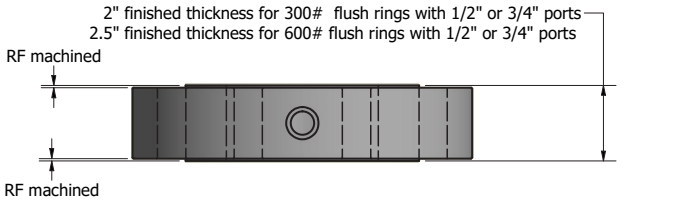

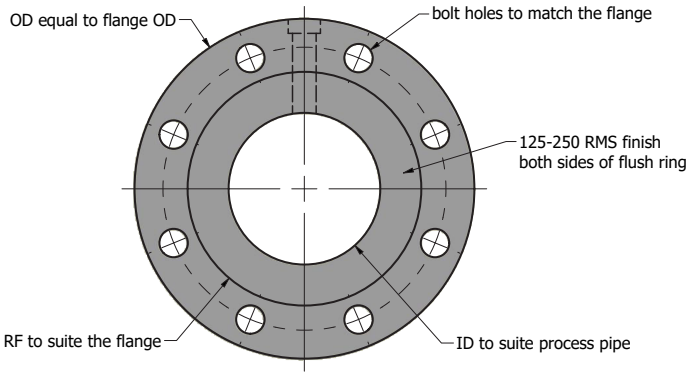

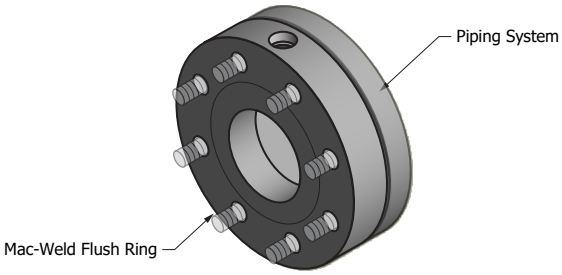

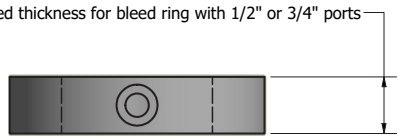

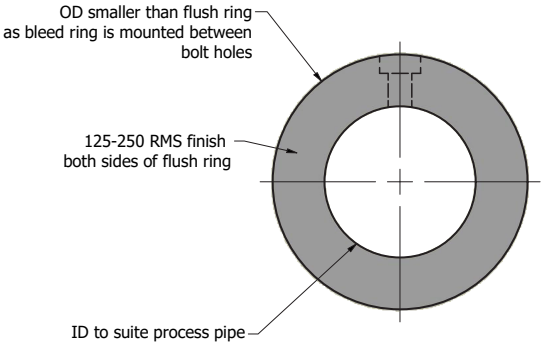

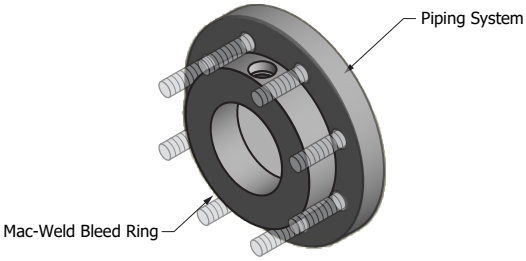

Notes:

- Material requirements are greater for flush ring as compared with bleed ring. OD of a flush ring and thickness are significantly greater than those of bleed ring.
- Raw materials sourced for production are significantly more expensive for flush rings due to greater OD and greater thickness
- Flush Rings require significantly greater manufacturing time, as compared to a simple bleed ring.

MACWELD machining

North America's Leading Instrumentation Hardware Manufacturer

✓ Thermowells ✓ Pressure Vessels
✓ Orifice Plates ✓ Valves & Manifolds
✓ Bleed & Flush Rings ✓ Specialty Products

1324 Lougar Ave Sarnia, ON N7S 5N7 | 1-877-MAC-WELD (622-9353) | sales@mac-weld.com

www.mac-weld.com